INSTALLATION GUIDE

GB

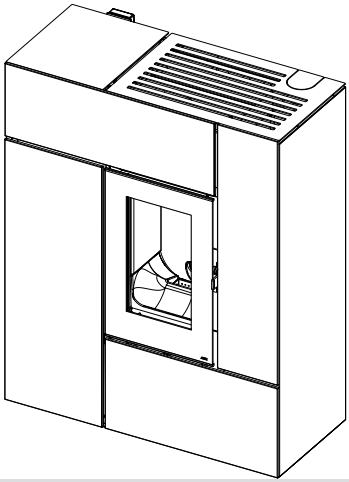

SEALED PELLET STOVE

FEEL AIRMATIC 10 M1 CORE
FEEL AIRMATIC 10 UP! M1 CORE

PART 1 - REGULATIONS AND ASSEMBLY

Instructions in English

MCZ

8902616200

TABLE OF CONTENTS

TABLE OF CONTENTS II
INTRODUCTION 1
1-WARNINGS AND WARRANTY CONDITIONS 2
2-INSTALLATION 12
3-DRAWINGS AND TECHNICAL FEATURES 20
4-UNPACKING 26
5-CONNECTION OF THE TOP SMOKE OUTLET PIPE 30
6-COMFORT AIRMATIC 33
7-TOP AND SIDE PANELS DISASSEMBLY 36
8-HOW IT ARRIVES 39
9-CUSTOM CLADDING PREPARATION 43
10-CLADDING ASSEMBLY 46
11-OPENING DOORS 53
12-PELLET COVER 54
13-ELECTRICAL CONNECTION 55
14-LOADING PELLETS 56

INTRODUCTION

Dear Customer,
Our products are designed and manufactured in accordance with standards in force, with high quality materials and using our extensive experience in the transformation processes.
To get the best performance, we suggest you read the instructions in this manual carefully.
This installation guide is an integral part of the product: ensure that the manual is always supplied with the appliance, even if it changes owner. If the manual is lost, you can request another copy from the local Technical Dept. or download it directly from the company's website.
All local regulations, including those referring to national and European standards, must be observed when installing the appliance.
In Italy, for the installation of systems with a biomass below 35KW, refer to the Ministerial Decree 37/08 and the qualified installation technician with the suitable requirements must issue a certificate of compliance for the system installed. (By system we intend Stove+Flue+Air inlet).

REVISIONS TO THE PUBLICATION

The content of this manual is strictly technical and the property of MCZ Group Spa.
No part of this manual may be translated into other languages, adapted and/or reproduced, even in part, in other mechanical and/or electronic form or media, for photocopies, recordings or other, without the prior written authorisation of MCZ Group Spa.
The company reserves the right to make changes to the product at any time without prior notice. The owner company reserves its rights according to law.

CARE OF THE MANUAL AND HOW TO CONSULT IT

- Take care of this manual and store it in an easily and quickly accessible place.
- Should this manual be lost or destroyed, request a copy from your retailer or directly from the authorised Technical assistance department. It can also be downloaded from the company's website.
- "**Bold text**" requires special attention.
- "*Text in italics*" is used to draw attention to other paragraphs in the manual or for any additional clarifications.
- "Note" provides the reader with additional information.

SYMBOLS USED IN THE MANUAL

	ATTENTION: carefully read the relative message as **failure to comply with the information provided may result in serious damage to the product and danger to the persons who use it**.
	INFORMATION: failure to comply with these provisions will compromise use of the product.
	OPERATING SEQUENCES: sequence of buttons to be pressed to access the menus or perform adjustments.
	MANUAL carefully read this manual or the relative instructions.

Technical Dept. - All rights reserved - Reproduction prohibited

⚠ SAFETY WARNINGS

- **Before commencing any operation, the user and anyone preparing to work on the product must have read and understood the important warnings in the installation guide.** This will guarantee safe use of the product, as well as optimising the environmental benefits resulting from use of this heat generator.
- The heating system (generator + electrical connection + combustion air supply + combustion product extraction system + any hydraulic/aeraulic system) must be installed in compliance with the laws and regulations in force, and carried out by a qualified technician, who must issue a declaration of conformity of the system to the system manager and shall undertake full responsibility for final installation and consequent good operation of the product.
- **All local regulations, including those referring to national and European standards, must be observed when installing the appliance.**
- Comply with the installation instructions, safety distances from combustible materials and disposal instructions for the product and its packaging that are specified in the manual.
- Only use the fuel recommended by the manufacturer. The product must not be used as an incinerator.
- It is strictly forbidden to use alcohol, petrol, liquid fuel for lanterns, diesel, bio-ethanol, fluids for lighting charcoal or similar liquids to light/rekindle the flame in these devices. Keep these flammable liquids well away from the appliance when in use.
- Do not put any fuel other than wood pellets in the hopper.

1-WARNINGS AND WARRANTY CONDITIONS

- **This appliance can be used by children aged 8 years and above and persons with reduced physical, sensory or mental capabilities or lack of experience and knowledge provided they are supervised or have been given instructions regarding use of the appliance in a safe way and understand the hazards involved. Children must not play with the appliance. Cleaning and maintenance to be performed by the user must not be carried out by children without supervision.**
- Packaging items are NOT toys, as they can cause risk of suffocation or strangling and other health hazards! People (including children) with reduced mental or motor capacities, or lacking experience and knowledge, must be kept away from the packaging.
- Dispose of combustion ash in accordance with current laws.
- Do not climb on or lean on the product.
- Do not dry laundry on the product. Any drying racks or the like must be kept at a safe distance from the product. **Fire hazard.**
- The product maintenance operations must be exclusively carried out by a qualified operator on a yearly basis. Have the smoke expulsion system periodically checked and cleaned. Periodically check and empty the inspectionable parts of the smoke duct (e.g. Tee fitting caps).
- Keep the smoke expulsion system (connecting duct + chimney) clean according to the frequency and instructions in this manual. Inadequate maintenance of the smoke expulsion system can lead to a chimney blockage resulting in dangerous smoke escaping into the room.
- A non-compliant or improper/lack of maintenance of the product can cause hazardous situations and/or irregular operation.
- The manufacturer is relieved of any civil and criminal liability for damage caused by an installation nonconforming with standards and laws in force and by improper use and/or modification/tampering with the product and/or its accessory.

Technical Dept. - All rights reserved - Reproduction prohibited

1-WARNINGS AND WARRANTY CONDITIONS

- We do not recommend waiting for the parts to get worn out before having them replaced.
- Only use original spare parts. The retailer, service centre or qualified personnel can provide all necessary information regarding spare parts.
- The product reaches high temperatures during operation (door, handle, glass, smoke outlet pipe...): keep children and animals away and use appropriate personal protective equipment, such as heat protection fireproof gloves or actuation systems such as "cold handle" supplied with the product.
- In products with ducted hot air, the outlet air temperature can become very hot, even around 150°C: therefore any ducting must be insulated with adequate materials in crossings in contact with flammable surfaces or that are affected by the temperature (e.g. fading of colours, electric cable passage conduits, building insulation, etc.).
- **It is forbidden to operate the product with the door open or the glass broken. During operation, all the doors provided on the product must remain closed, with the exception of the one on the hopper which can be opened temporarily and only for the time required for topping up the fuel.**
- **The doors/covers on the appliance must remain closed when it is not being used.**
- The product must be electrically connected to a properly earthed system.
- Switch the product off in the event of a fault or malfunction.
- **Accumulated unburnt pellets in the brazier after each "failed ignition" or abnormal emptying of the pellet hopper must be completely removed before lighting again. Always check that the brazier is clean and positioned properly before lighting the product again.**
- Do not allow the product to come into contact with water (or other liquids) in any way; there are live electrical parts inside.
- Do not wash the product with water (or other liquids) as they could penetrate inside the unit, damaging the electrical insulation with the risk of electrocution.
- Do not use detergents to wash the stove, they could damage the aesthetic parts of the product.

1-WARNINGS AND WARRANTY CONDITIONS

- Do not stand for a long time in front of the product in operation. Do not overheat the room you are in and where the product is installed. This may harm one's physical conditions and cause health problems.
- Install the product in rooms that do not pose a fire hazard and are equipped with power and air supplies and smoke outlets.
- In the event of fire in the chimney, turn off the device, disconnect it from the mains and do not open the door whatsoever. Then contact the competent authorities.
- With the exception of sealed installations (certified sealed product and outside ducting of combustion air + connection to chimney made hermetically with respect to the installation environment), it is also forbidden for liquid fuel appliances with continuous or intermittent operation that draw the combustion air from the room they are installed in or B-type gas heating appliances, with or without the production of domestic hot water, to coexist in the same room or in interconnecting rooms.
- The product and the cladding must be stored in a dry place and must not be exposed to weathering.
- It is recommended not to remove the feet that support the product in order to ensure adequate insulation, especially if the flooring is made of flammable materials.
- Assess the static conditions of the surface on which the weight of the product will rest and provide suitable insulation if it is made of flammable material (e.g. wood, fitted carpet or plastic).
- In the event of a malfunction of the ignition system, do not force it on by using flammable materials.
- **It is forbidden to manually load the fuel into the brazier. Failure to follow this warning can lead to hazardous situations.**
- The sound pressure level of this appliance does not exceed 70 dB(A).

Technical Dept. - All rights reserved - Reproduction prohibited

1-WARNINGS AND WARRANTY CONDITIONS

- **Live electrical parts: only power the product once it has been fully assembled.**
- **Disconnect the product from the 230V power supply before performing any maintenance operations. The plug must be removed in such a way that an operator can verify from any point to which he/she has access, that the plug remains unplugged.**
- When first switched on, it is normal for the product to emit smoke due to the first heating of the paint; keep the room in which it is installed well ventilated.
- The product is not a cooking appliance.

1-WARNINGS AND WARRANTY CONDITIONS

INFORMATION:

- Please contact the retailer or qualified personnel for any information, problem or malfunction.
- Only use the fuel specified by the manufacturer.
- When the product is switched on for the first time, it is normal for it to emit smoke due to the paint heating up for the first time. Therefore make sure the room it is installed in is well-ventilated.
- Periodically check and empty the inspectionable parts of the smoke duct (e.g. Tee fitting caps)
- Have the smoke outlet system periodically checked and cleaned
- The product is not a cooking appliance.
- Always keep the cover of the fuel hopper closed.
- Store this installation and user manual with care as it must accompany the product for the duration of its useful life. If the product is sold or transferred to another user, always ensure the manual is also handed over.

INTENDED USE

The product only works with wood pellets and must be installed inside a room.

PRODUCT PERFORMANCE CHECKS.

All our products undergo ITT TESTS carried out by a notified third party laboratory (system 3) and in accordance with Regulation (EU) number 305/2011 "Construction products", according to standard EN 16510-1 + EN 16510-2-1/-2 /-6 (ex-EN 13240 / EN 13229 / EN 14785) for household appliances and "Machinery Directive" EN 303-5 for boilers.

In the case of tests for any market surveillance or inspections by third parties, please consider the following warnings:

- To reach the declared performance levels, the product must perform an operating cycle of at least 15-20 hours beforehand.
- Set the average draught of the combustion fumes as specified in the "technical product features" table
- The type of pellets used must comply with the current EN ISO 17225-2 class A1 regulation. Fir pellets are usually used for certification.
- The amount of thermal energy can vary according to the length and calorific value of the fuel. This may require some adjustments (accessed from the user menu) to comply with the hourly consumption specified in the "technical product features" table. Using class A1 pellets guarantees a calorific value that is likely to be close to that used in the product certification; the size of the pellet grains can significantly affect hourly fuel loading and consequently performance; it is therefore suggested to use pellets with a 6 mm diameter and an average length of around 24 mm (avoid pellets that are too long or excessively crushed).
- With wood-burning appliances, the fuel must comply with the current EN ISO 17225-5 class A1 regulation. Check the correct moisture of the fuel, as it must be within the range of 12 - 20% (it is best if the moisture is close to 12%, as is normally used in certification). As the fuel moisture increases, different combustion air settings are required, which are implemented from the combustion air register, thereby modifying the mixture of primary and secondary air
- It is important to check the operation of devices that can affect performance (for example air fans or electric safety devices) in case of damage due to handling.
- Nominal performance has been obtained by setting the maximum flame power and room ventilation in **manual** mode.
  Performance at reduced power was achieved at minimum flame and ventilation power (P1 and V1) in manual mode.
  The other conditions correspond to intermediate ventilation and power.
- If a "verification" mode is provided in the menu, set this function during the readings to ensure that no temperature modulation occurs due to an incorrect setting of the operating parameters.
- Lastly, strictly comply with the sampling points specified in the regulations in terms of emissions as well as temperature

Technical Dept. - All rights reserved - Reproduction prohibited

1-WARNINGS AND WARRANTY CONDITIONS

WARRANTY CONDITIONS

For the duration, terms, conditions, limitations of the MCZ conventional warranty, please refer to the specific warranty card that is included with the product.

Information for management of waste electrical and electronic equipment containing batteries and accumulators

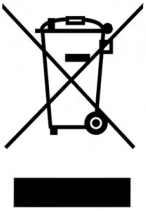

This symbol appears on the product, on the batteries, on the accumulators or on their packaging or on their documentation; it indicates that the product and the batteries or the accumulators included must not be collected, recycled or disposed of with household waste at the end of their service life.

Improper management of waste electrical and electronic equipment, batteries or accumulators can cause the hazardous substances contained within to leak out. In order to avoid harming the environment or health, the user is required to separate this equipment, and/or the batteries or accumulators included, from other types of waste and deliver them to the local collection centre. The distributor can be asked to collect the waste electrical and electronic equipment under the conditions and according to the procedures laid down by Legislative Decree 49/2014.

Separate collection and correct treatment of waste electrical and electronic equipment, batteries and accumulators contribute to conserving natural resources, respect for the environment and ensure the protection of health.

For more information on collection centres for waste electrical and electronic equipment, batteries and accumulators, contact the competent public Authorities for issue of the authorisations.

1-WARNINGS AND WARRANTY CONDITIONS

WARNINGS FOR THE CORRECT DISPOSAL OF THE PRODUCT

The owner is the sole party responsible for demolishing and disposing of the stove, which must be performed in compliance with laws related to safety and environmental protection in force in his/her country.
At the end of its working life, the product must not be disposed of as urban waste.
It must be taken to a special differentiated waste collection centre set up by the local authorities or to a retailer that provides this service.
Separating and recycling prevents potential negative effects on the environment and health (often caused by inappropriately disposing of product parts). It also allows materials to be recovered in order to obtain significant savings in energy and resources.

The following table and the exploded view it refers to highlight the main components that can be found in the device and indications on how to separate and dispose of them correctly when no longer used.
More specifically, the electric and electronic components must be separated and disposed of in authorised centres, in compliance with the WEEE directive 2012/19/EU and the relative national transpositions.

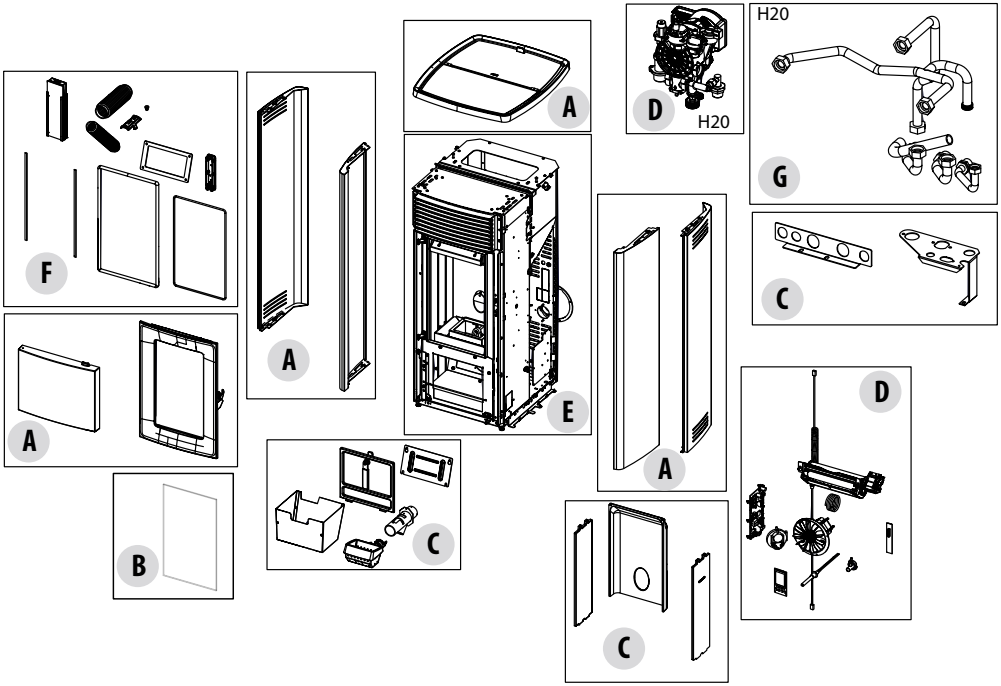

LEGENDA	WHERE TO DISPOSE	MATERIALS
A OUTER CLADDING	If there is any, to be disposed of separately based on the material used:	Metal
		Glass
		Tiles or ceramics
		Stone
B GLASS DOORS	If there is any, to be disposed of separately based on the material used:	Glass ceramic (fire door): to be disposed of with inert or mixed waste
		Tempered glass (oven door): to be disposed of with glass
C INTERIOR CLADDING	If there is any, to be disposed of separately based on the material used:	Metal
		Refractory materials
		Insulating panels
		Vermiculite
		Insulation, vermiculite and refractory materials that have come into contact with flames or exhaust gases (dispose of in mixed waste)
D ELECTRIC AND ELECTRONIC COMPONENTS	To be disposed of separately in authorised centres, as indicated in the WEEE directive 2012/19/EU and the relative national transposition.	Wiring, motors, fans, circulators, display panels, sensors ignition plug, electronic cards, batteries.
E METAL STRUCTURE	To be disposed of separately with metal	
F COMPONENTS THAT CANNOT BE RECYCLED	To be disposed of with mixed waste	E.G.: Gaskets, rube piping, silicone or fibres, plastic.
G HYDRAULIC COMPONENTS	*Piping, fittings, expansion vessel, valves. If there are any, to be disposed of separately based on the material they are made of:*	Copper
		Brass
		Stainless steel
		Other materials

1-WARNINGS AND WARRANTY CONDITIONS

Our solid bio-combustible products, (hereinafter called "Products") are designed and manufactured in compliance with one of the following European standard harmonised to Regulation (UE) no. 305/2011 for construction products:

EN 16510-1:2022 + EN 16510-2-6:2022: "Domestic space heaters fired with wood pellets"(ex-EN 14785)
EN 16510-1:2022 + EN 16510-2-1:2022: "Domestic space heaters fired with wood logs" (ex-EN 13240)
EN 16510-1:2022 + EN 16510-2-2:2022: "Wood log inserts and fireplaces" (ex-EN 13229)

The products also comply with the essential requirements of Directive **2009/125/EC (Eco Design)** and, where applicable, Directives:

2014/35/EU (LVD - Low Voltage directive)
2014/30/EU (EMC - Electromagnetic Compatibility directive)
2014/53/EU (RED – Radio Equipment directive)
2011/65/EU (ROhS)

The EC Declaration of Conformity, the Declaration of Performance required by EU Regulation 305/2011 and all other product certification documents can be downloaded by scanning the QR code on this page (also found on the product label) or by accessing the website page www.mczgroup.com/support/mcz

Having specified the above, we highlight and report that:

- **This manual and technical data sheet, also available on our website,** bear all of the specific indications and necessary and essential information to choose the product, to install it correctly and to properly size the smoke expulsion system;
- the Products must be **installed, controlled and serviced** by a qualified operator, according to the instructions in this manual and in compliance with the laws and installation and maintenance standards in force in individual countries, so as to provide an efficient heating system, properly sized according to the needs of the home;
- **if the Products are thermally stressed,** constantly operating for several hours at high power (e.g. 3, 4 hours a day at outputs P4 or P5), we recommend more frequent cleaning and reducing the interval between routine maintenance operations according to the operating condition of the product. We furthermore point out that these operating conditions increase the risk of premature wear of the product, especially those parts exposed to the direct heat of the fire (e.g. combustion chamber), the original condition of which can undergo modifications and deterioration which, among other things, could generate noise during operation of the unit due to mechanical expansion.

The manufacturer will not be held liable if the above information is not observed.

Technical Dept. - All rights reserved - Reproduction prohibited

2-INSTALLATION

The instructions in this chapter refer explicitly to the Italian installation regulation UNI 10683. In any case, always observe the regulations in force in the country of installation.

PELLETS

The pellet is obtained from natural dried wood sawdust (without paint). The compactness of the material is guaranteed by the lignin contained in the wood itself, without glue or binders.
The market offers different types of pellets with characteristics that vary according to the wood mixtures. The most common diameter on the market is 6 mm (although 8 mm diameter is also available) with a length, on average, between 3 and 40 mm. A good quality pellet has a density of between 600 and 750 or more kg/cubic metres and a moisture content that accounts for 5 to 8% of its weight.
Pellets have technical advantages besides being an ecological fuel, as the wood residue is used completely, thereby achieving cleaner combustion than that of fossil fuels.
While good-quality wood has a calorific value of 4.4 kW/kg (15% moisture, after about 18 months of seasoning), that of pellets is around 4.9 kW/kg. To ensure good combustion, the pellets must be stored in a dry place and protected from dirt. Pellets are usually supplied in 15 kg bags, therefore, storing them is very convenient.

15 Kg BAG OF PELLETS

Good quality pellets guarantee good combustion, thereby decreasing harmful emissions into the atmosphere.

The poorer the quality of the fuel, the more often the internal parts of the brazier and combustion chamber need to be cleaned.

The main quality certifications for pellets currently available on the European market guarantee that the fuel complies with class A1/A2 according to ISO 17225-2. These certifications include, for example, ENPlus, DINplus, Ö-Norm M7135, and specifically assure that the following characteristics are complied with:

- calorific value: 4.6 - 5.3 kWh/kg.
- Water content: ≤ 10% of the weight.
- Percentage of ash: max 1.2% of the weight (A1 less than 0.7%).
- Diameter: 6±1/8±1 mm.
- Length: 3-40 mm.
- Content: 100% untreated wood without the addition of binding agents.

The company recommends using certified fuel for its products (ENPlus A1, DINplus, Ö-Norm M7135).
The use of pellets that do not comply with the characteristics specified previously may compromise the operation of your product and therefore invalidate the warranty and product liability.

2-INSTALLATION

FOREWORD

The heating system (generator + combustion air supply + combustion product expulsion system + any hydraulic/aeraulic system) must be installed in compliance with the laws and regulations in force[1], and carried out by a qualified technician, who must issue a declaration of conformity of the system to the system manager and shall undertake full responsibility for final installation and consequent good operation of the product.

The manufacturer declines all responsibility in the event of installations that do not comply with the laws and regulations in force and inappropriate use of the appliance.

In particular one must ensure that:

- the environment is suitable for installing the appliance (floor load-bearing capacity, presence or possibility of creating an adequate electrical/hydrauic/aeraulic system when required, volume compatible with the appliance characteristics, etc.);
- the appliance is connected to a smoke expulsion system correctly sized according to EN 13384-1, which is resistant to soot fire and which complies with the distances prescribed by the combustible materials indicated on the plate data;
- there is a suitable combustion air flow to the appliance;
- other combustion appliances or extraction devices installed do not cause a negative pressure of more than 4 Pa in the room where the product is installed compared to the outside (only sealed appliances are allowed a maximum of 15 Pa of negative pressure in the room).

[1] The national reference standard for the installation of domestic appliances is UNI 10683 (IT) - DTU NF 24.1 (FR) - DIN 18896 (DE) - NBN B 61-002 (BE) - Real Decreto 1027/2007 (ES)

In particular, it is recommended to strictly observe the safety distances from combustible materials to avoid serious harm to people and to the integrity of the home.

Installation of the appliance must ensure easy access to service the appliance itself, the smoke channels and the flue.
Always maintain adequate distance and protection in order to prevent the product from coming into contact with water.

It is forbidden to install the stove in rooms with a fire hazard.
With the exception of sealed installations, it is also forbidden for liquid fuel appliances with continuous or intermittent operation that draw the combustion air from the room they are installed in or B-type gas heating appliances, with or without the production of domestic hot water, to coexist in the same room or in interconnecting rooms.

Sealed installation means that the product is certified as sealed and its installation (ducting of the combustion air and connection to the chimney) is airtight with respect to the installation environment.

A sealed installation does not consume the room's oxygen but draws all the air from the outer environment (if suitably ducted) and makes it possible to install the product, therefore, it can be installed in all houses that require a high degree of insulation such as "passive" or "high energy efficiency" houses.
Thanks to this technology, the product does not increase releases to the environment, making it more comfortable and increasing the overall efficiency of the system.
The sealed installation is also compatible with the presence of controlled mechanical ventilation or in premises that might have negative pressure with respect to the outside.

Technical Dept. - All rights reserved - Reproduction prohibited

2-INSTALLATION

MINIMUM DISTANCES

Observe the distances to flammable walls/objects (sofas, furniture, wood panelling, matchboarding, etc.) as specified in the technical data table with reference to the diagram below. If objects considered to be particularly sensitive to heat are present, such as furniture, curtains or sofas, as a precaution, increase the stove clearances substantially to avoid possible deterioration due to the effect of heat.

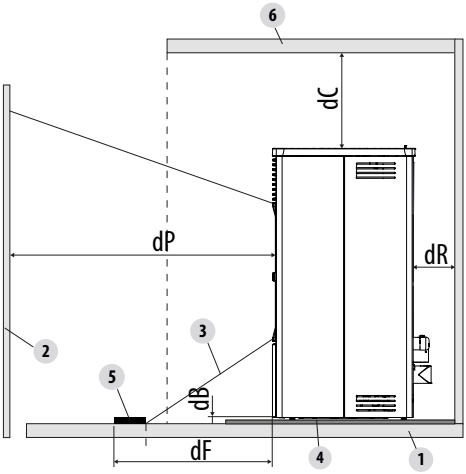

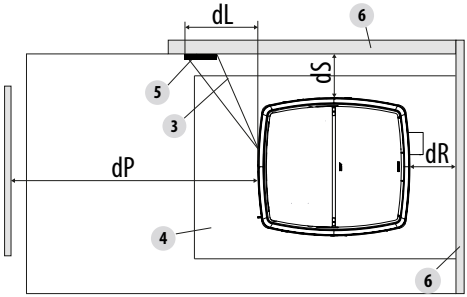

Safety distances to combustible material (for values please refer to the technical data table)*	
dR (rear distance)	dP (front radiation)
dS (side distance)	dF (floor radiation)
dB (lower distance)	dL (side radiation)
dC (upper distance)	s (additional insulation thickness)

*Provide additional insulation thickness to protect flammable surfaces if specified in the technical data table. It is preferable to achieve the specified thickness with 2 layers fitted with staggered joints.
EXAMPLE ROCK WOOL INSULATION PANEL (COATED ON ONE SIDE WITH ALUMINIUM FILM): FIRE REACTION EUROCLASS A1 - DENSITY 90 kg/m3 - THERMAL CONDUCTIVITY < 0.35 W/mK

KEY

1	FLOOR	4	FLOOR GUARD
2	FRONT FLAMMABLE MATERIAL	5	RADIATED SURFACE TO BE PROTECTED
3	AREA SUBJECT TO RADIATION	6	REAR/SIDE/UPPER FLAMMABLE SURFACE

If the floor is made of combustible material, use a protection made of non-combustible material (steel, glass...) that also protects the front from any falling combusted material during cleaning operations.

Always fit a floor guard if the floor is made of flammable material.

Install the stove also detached from any non-combustible walls/surfaces, observing the minimum distance specified in the technical data table (dnon) to allow effective aeration of the appliance and good heat distribution in the room.

In any case, ensure adequate distance to facilitate access during cleaning and extraordinary maintenance. If this is not possible, it must still be possible to distance the product from adjacent walls/elements.
This operation must be performed by a technician qualified to disconnect the combustion product expulsion ducts and their subsequent restoration.

For generators connected to the hydraulic system, a connection must be provided between the system itself and the product so that, during extraordinary maintenance, carried out by a qualified technician, it is possible to move the generator by at least 50 cm from adjacent walls without emptying the system (e.g. by using a double shut-off gate or suitable flexible connection).

Air inlet

It is mandatory to provide an adequate external air inlet that supplies the combustion air required for the product to work properly. The flow of air between the outside and the installation room can take place with a free air inlet or by channelling the air directly to the outside[3].
The free air inlet must:

- be made at floor level
- always be protected with an outer grille and in such a way that it cannot be obstructed by any object
- have a minimum total free area of 80 cm2 (net of the grille)

The presence of other suction devices (e.g.: vmc, electric fan for stale air extraction, kitchen hood, other stoves, etc.), in the same room could cause negative pressure in the room. In this case, with the exception of sealed installations, one must verify that, with all the equipment on, no more than 4 Pa of negative pressure is created inside the installation room with respect to the outside. If necessary, increase the air inlet section.
It is possible to duct the air required for combustion to the outside by connecting the external air inlet directly with the combustion air inlet which is usually found on the back of the appliance.
The duct must comply with the following dimensions (each 90° bend is equivalent to one linear metre):

[3] In the event the combustion air is ducted on unsealed products, still verify that no more than 4 Pa of negative pressure is created inside the installation room with respect to the outside, otherwise provide for an additional air intake in the room.

Technical Dept. - All rights reserved - Reproduction prohibited

Below 15kW:

Air duct diameter	Maximum length (smooth duct)	Maximum length (corrugated duct)
50mm	2m	1m
60mm	3m	2m
80mm	7m	4m
100mm	12m	9m

Above 15kW:

Air duct diameter	Maximum length (smooth duct)	Maximum length (corrugated duct)
50mm	-	-
60mm	1m	-
80mm	3m	1m
100mm	7m	4m

2-INSTALLATION

Preparing the smoke expulsion system

The combustion product expulsion system is a particularly important element for the proper operation of the appliance and must be correctly sized according to EN 13384-1.
Its creation/adaptation/verification must always be carried out by a legally qualified operator and must comply with the regulations in force in the country where the appliance is installed.
The Manufacturer declines all liability for malfunctions caused by a badly sized and non-compliant smoke expulsion system.

Smoke duct (smoke fitting)

The smoke duct is the pipe that connects the appliance to the flue.
This smoke fitting must comply in particular with the following requirements:

- comply with product standard EN 1856-2;
- its cross-section must be of constant diameter and no less than that of the appliance outlet, from the firebox outlet up to the connection in the flue;
- the horizontal section must be as short as possible and extend no more than 4 metres;
- the horizontal sections must have a minimum upward slope of 3%;
- changes of direction must have an angle no greater than 90° and be easy to inspect
- the number of changes of direction, including that for entry into the flue, and exclusion of the T in the event of a side or rear outlet, must not exceed 3;
- it must be insulated if it passes outside the installation room
- it must not in any case cross rooms in which it is forbidden to install combustion appliances.
- the use of flexible metal and fibre cement or aluminium hoses is forbidden;

In any case, smoke ducts must be sealed against combustion products and any condensation. For this reason, it is recommended to use pipes with silicone gaskets or similar sealing devices that withstand the operating temperatures of the appliance (e.g. T200 P1) and that by removing the gaskets, are still T400 N1 G certified.

Flue (chimney or piped duct)

When creating the flue, in particular comply with the following requirements:

- comply with the applicable product standard (EN 1856, EN 1857 EN 1457, EN 1806, EN 13063..);
- be made with suitable materials to ensure resistance to normal mechanical, chemical, thermal stresses and have adequate thermal insulation in order to limit the formation of condensate;
- have a predominantly vertical configuration and be free of choke points along its entire length;
- be correctly spaced by air gaps and isolated from combustible materials;
- the flue inside the house must still be insulated and can be inserted in an air shaft provided it complies with the regulations for piping;
- the smoke duct must be connected to the flue by means of a Tee fitting with an inspectable collection chamber for the collection of soot and any condensate.
- where the sizing provides for wet operation, a suitable condensate collection and siphon discharge system must be set up.

We recommend checking the data plates of the flue for the safety distances that must be observed in the presence of combustible materials and, if necessary, the type of insulating material to be used.
It is forbidden to connect the stove to a collective or shared flue (*) with other combustion appliances or with hood outlets.
It is forbidden to use the direct drain on the wall or towards indoor spaces and any other form of drain not provided for by the regulation in force in the country of installation.

Technical Dept. - All rights reserved - Reproduction prohibited

Chimneypot

The chimneypot, meaning the end part of the flue, must meet the following characteristics:

- the smoke outlet section must be at least double the internal section of the chimney;
- prevent the penetration of rain or snow;
- ensure the outlet of smoke even in the event of wind (windproof chimneypot);
- the height of outflow must be beyond the reflux area (*) (refer to national regulations to identify the reflux area);
- always be built at a distance from antennas or dishes, and never be used as a support.

(*) unless there are specific national derogations (clearly specified in the corresponding instruction manual in English) which under appropriate conditions allow it; in this case, strictly follow the product/installation requirements of the relative regulations/technical specifications/legislation in force in that country.

EXAMPLES OF INSTALLATION[4] (DIAMETERS AND LENGTHS TO BE SIZED)

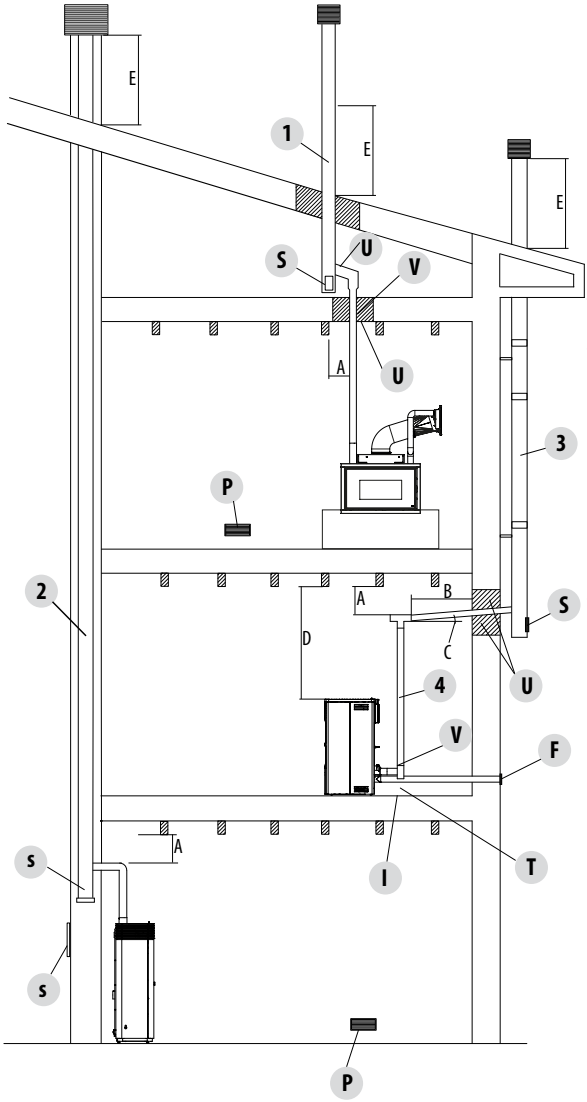

1. Flue installation with hole for the passage of the pipe increased by:
- minimum 100mm around the pipe if next to non-flammable parts such as cement, brick, etc.; or
- minimum 300mm around the pipe (or as required by plate data) if next to flammable parts such as wood etc.

In both cases, install suitable insulation between the flue and the ceiling.
Always check and comply with the plate data of the flue, specifically the minimum safety distances from combustible materials.
The previous rules also apply for holes made in walls.

2. Old flue, pipe with the inclusion of an external access door for chimney cleaning.

3. External flue made of insulated stainless-steel pipes, i.e. with double walls: all securely mounted on the wall. With windproof chimneypot.

4. Ducting system using Tee fittings that allow easy access for cleaning without having to remove the pipes

U=INSULATION
V=POSSIBLE DIAMETER INCREASE
I=INSPECTION CAP
S=INSPECTION ACCESS PANEL
P=AIR INLET
T=TEE FITTING WITH INSPECTION CAP
A=DISTANCE FROM FLAMMABLE MATERIAL (SMOKE DUCT PLATE)
B=MAXIMUM 4 M
C=MINIMUM 3° SLOPE
D=DISTANCE FROM FLAMMABLE MATERIAL (APPLIANCE PLATE)
E=REFLUX AREA
F=AIR DUCTING

[4] The figure shows typical, but not exhaustive, examples of all possible installations (which must always be approved by a qualified technician)

Technical Dept. - All rights reserved - Reproduction prohibited

DRAWINGS AND CHARACTERISTICS

FEEL AIRMATIC 10 M1 CORE STOVE DIMENSIONS

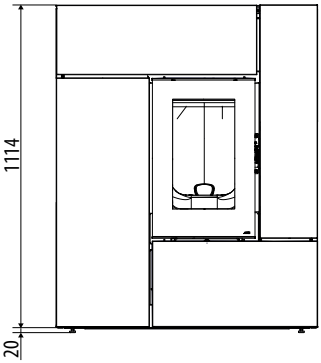

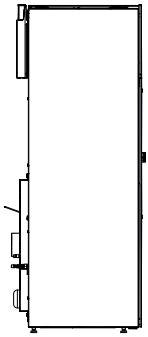

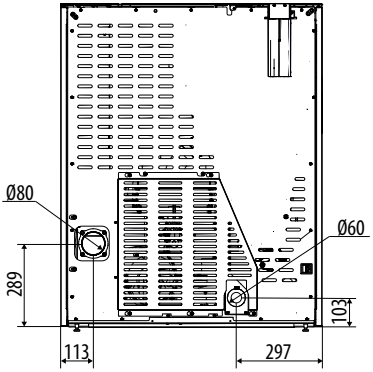

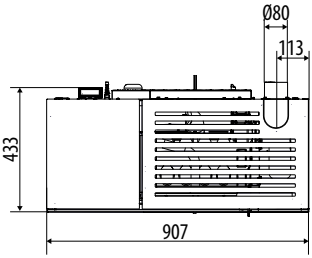

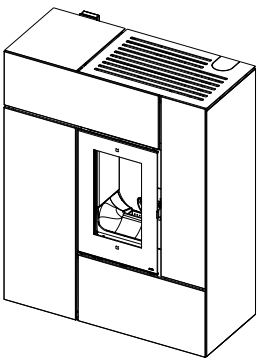

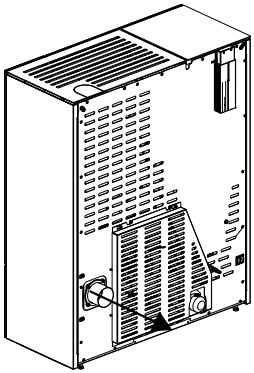

FEEL AIRMATIC 10 UP! M1 CORE STOVE DIMENSIONS

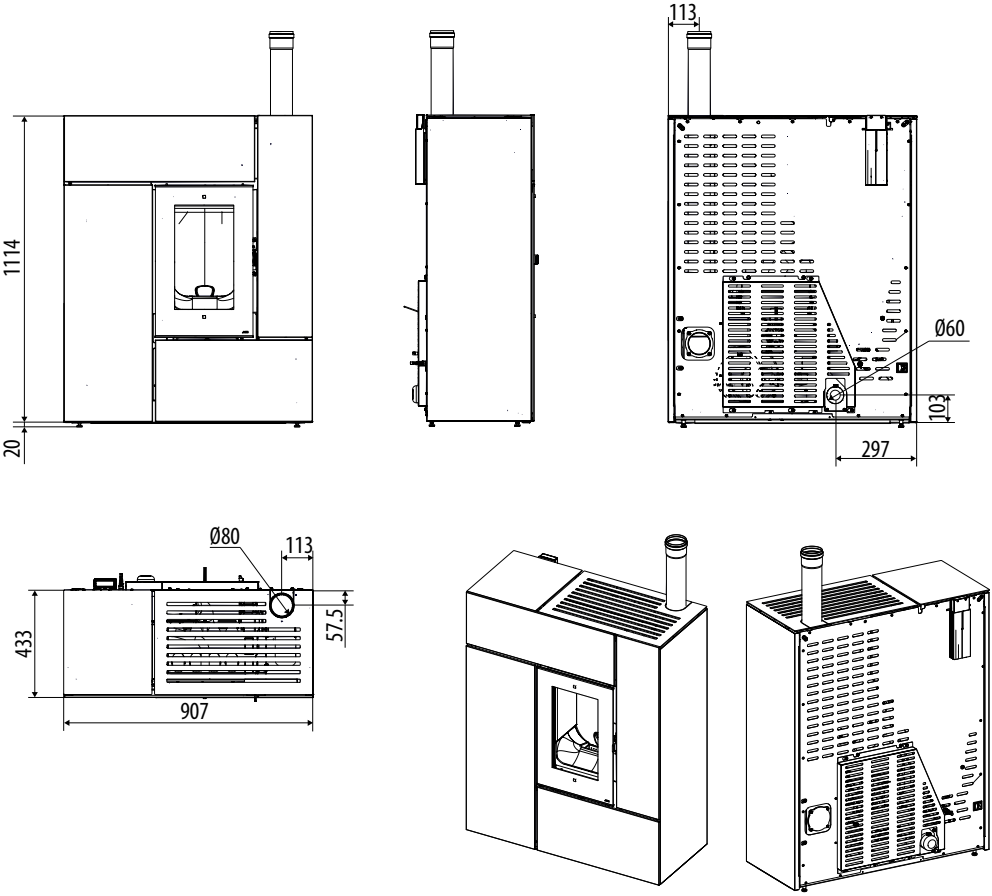

	FEEL AIRMATIC 10 M1 CORE/ FEEL AIRMATIC 10 UP! M1 CORE			
General data	Brand		MCZ	
	EU Standard		EN 16510-1:2022 / EN 16510-2-6:2022 (ex-EN 14785)	
	Appliance Type (tightness)	Type	CC50	
	Continuous (CON) or intermittent (INT) operation	CON / INT	CON	
	Fuel type		Wood Pellet (L)	
	Fuel dimensions		Ø 6mm L 3 ÷ 40mm	
	Energy class (scale A++/G)		A+	
	Energy efficiency index	EEI	129	
	Seasonal space heating efficiency	ηS	88	
Nominal performances	Nominal heat input	Pinputnom	11,2	kW
	Nominal heat output	Pnom	10,2	kW
	Fuel consumption at nominal heat output*	kg/hnom	2,3	kg/h
	Pellet tank autonomy at nominal heat output*	Autnom	13	h
	Efficiency at nominal heat output	ηnom	91	%
	CO2 at nominal heat output	CO2nom	11,1	%
	CO (%) at 13% O2 at nominal heat output	CO%nom (13% O2)	0,006	% (13% O2)
	CO at 13% O2 at nominal heat output	COnom (13% O2)	70	mg/m^3 (13% O2)
	NOx at 13% O2 at nominal heat output	NOxnom (13% O2)	95	mg/m^3 (13% O2)
	OGC at 13% O2 at nominal heat output	OGCnom (13% O2)	1	mg/m^3 (13% O2)
	PM at 13% O2 at nominal heat output	PMnom (13% O2)	8	mg/m^3 (13% O2)
	Flue gas outlet temperature at nominal heat output**	Tsnom	167	°C
	Minimum flue draught at nominal heat output****	pnom	10	Pa
	Flue gas mass flow at nominal heat output	Φf,g nom	7,1	g/s

Partial load performances	Partial load heat input	$Pinput_{part}$	5,3	kW
	Partial load heat output	P_{part}	5	kW
	Fuel consumption at partial load heat output*	kg/h_{part}	1,1	kg/h
	Pellet tank autonomy at partial load heat output*	Aut_{part}	28	ore
	Efficiency at part load heat output	η_{part}	93,8	%
	CO2 at partial load heat output	$CO2_{part}$	7,7	%
	CO (%) at 13% O2 at partial load heat output	$CO\%_{part}$ (13% O2)	0,008	% (13% O2)
	CO at 13% O2 at partial load heat output	CO_{part} (13% O2)	95	mg/m3 (13% O2)
	NOx at 13% O2 at part load heat output	NOx_{part} (13% O2)	86	mg/m3 (13% O2)
	OGC at 13% O2 at part load heat output	OGC_{part} (13% O2)	1	mg/m3 (13% O2)
	PM at 13 % O2 at part load heat output	PM_{part} (13% O2)	10	mg/m3 (13% O2)
	Flue gas outlet temperature at part load heat output**	T_{spart}	110,4	°C
	Minimum flue draught at partial load heat output****	p_{part}	5	Pa
	Flue gas mass flow at part load heat output	$\Phi_{f.g\ part}$	4,8	g/s
Installation	Ventilation air intake section (cm2)		80	cm^2
	Combustion air inlet diameter (mm)		50	mm
	Diameter of the flue gas outlet	d_{out}	80	mm
	Chimney designation	T_{class}	T200G	mm
	Air heating outlet diameter		60	mm
	Heatable volume ***		510 / 291 / 185	m^3
	Minimum distance to combustible materials (rear)	d_R	20	mm
	Minimum distance to combustible materials (side)	d_S	250	mm
	Minimum distance to combustible materials (bottom)	d_B	0	mm
	Minimum distance to combustible materials (ceiling)	d_C	800	mm
	Minimum distance to non-combustible walls	d_{non}	-	mm
	Added protective insulation	s	-	mm
	Thermal conductivity additional insulation	λ_d	-	W/mK
	Minimum distance to combustible materials (radiant front)	d_P	1000	mm
	Minimum distance to combustible materials (radiant bottom)	d_F	200	mm
	Minimum distance to combustible materials (radiant side)	d_L	400	mm

Technical Dept. - All rights reserved - Reproduction prohibited

3-DRAWINGS AND TECHNICAL FEATURES

Electrical supply	Electrical consumption at nominal heat output	el_{max}	89	W
	Electrical consumption at part load heat output	el_{min}	36	W
	Maximum electric power input	W_{max}	340	W
	Electrical consumption at standby	el_{SB}	3	W
	Power supply voltage	E	230	V
	Power supply frequency	f	50	Hz
Dimensions	Pellet tank volume	$Tank_{vol}$	48	l
	Pellet tank capacity*	$Tank_{kg}$	31	kg
	Height/Width/Depth of the appliance	H/W/L	1126 / 907 / 433	mm
	Mass of the appliance	m	176	kg
	Maximum load of a chimney over the appliance	m_{chim}	-	kg
	Standing air loss	V_h	0	m^3/h
	* Values that can vary due to the used combustible			
	** Flue gas temperature at the appliance outlet, to be used in the chimney sizing calculation (according to EN 13384-1)			
	*** Heatable volume depending on the power required per m^3 (respectively 55–35–20 W/m^3)			
	**** Consider a minimum draught of 2 Pa in the EN 13384-1 chimney dimensioning calculations			

EN

MCZ GROUP

EN

INFORMATION REQUIREMENTS FOR SOLID FUEL LOCAL SPACE HEATERS
ACCORDING TO COMMISSION REGULATIONS (EU) 2015/1185 - (EU) 2015/1186 (PRODUCT FICHE)

Manufacturer:	**MCZ GROUP SpA**
Trademak:	**MCZ**
Model Identifier:	**FEEL AIRMATIC 10 M1 CORE / FEEL AIRMATIC 10 UP! M1 CORE**

Energy Efficiency Class	**A+**	**(A++ / G scale)**
Direct heat output (space heat output):	**10,2**	**kW**
Indirect heat output (water heat output):		**kW**
Energy Efficiency Index:	**129**	**EEI**
Useful efficiency at nominal heat output:	**91,0**	**%**
Useful efficiency at minimum heat output (indicative):	**93,8**	**%**

Specific Precautions: Observe the specific precautions for installation, assembly and maintenance indicated in the manual accompanying the product, and the national and local rules in force

Indirect heating functionality:	**NO**
CPR harmonised standard:	**EN 16510-1:2022 / EN 16510-2-6:2022 (ex-EN 14785)**
Product description:	**Mechanically fed roomheater burning wood pellets**
Notified Body:	**ACTECO SRL (N.B. 1880)** **Via Amman 41, 33084 Cordenons (PN), IT**

Fuel	**Preferred fuel:**	**Other suitable fuel(s):**	**ηs [%]**	**EEI [%]**
Log wood, moisture content ≤ 25 %	**NO**	**NO**		
Compressed wood with moisture content < 12 %	**YES**	**NO**	**88**	**129**
Other woody biomass	**NO**	**NO**		

Characteristics when operating with the preferred fuel:				
Space heating emissions (mg/Nm3 at 13% O2)	**CO**	**NO_x**	**OGC**	**PM**
at Nominal heat output	**70**	**95**	**1**	**8**
at Minimum heat output	**95**	**86**	**1**	**10**

Heat output			
Item	Symbol	Value	Unit
Nominal heat output	P_{nom}	**10,2**	kW
Minimum heat output (indicative)	P_{min}	**5,0**	kW
Useful efficiency (NCV as received)			
Useful efficiency at nominal heat output	$\eta_{th,nom}$	**91,0**	%
Useful efficiency at minimum heat output (indicative)	$\eta_{th,min}$	**93,8**	%
Auxiliary electricity consumption			
At nominal heat output	el_{max}	**0,089**	kW
At minimum heat output	el_{min}	**0,036**	kW
In standby mode	el_{sb}	**0,003**	kW

Type of heat output/room temperature control (select one)	
single stage heat output, no room temperature control	NO
two or more manual stages, no room temperature control	NO
with mechanic thermostat room temperature control	NO
with electronic room temperature control	NO
with electronic room temperature control plus day timer	NO
with electronic room temperature control plus week timer	YES
Other control options (multiple selections possible)	
room temperature control, with presence detection	NO
room temperature control, with open window detection	NO
with distance control option	YES

Technical Dept. - All rights reserved - Reproduction prohibited

INSTRUCTIONS FOR PACKAGING DISPOSAL

The material that the appliance's packaging is made of must be managed correctly, in order to make collection, reuse, recovery and recycling easier, where possible.
The table below illustrates the possible components that the packaging is made of, and the relative instructions for correct disposal.

DESCRIPTION	CODE MATERIAL	SYMBOL	DIRECTIONS FOR COLLECTION
WOOD BED	WOOD FOR 50	50 FOR	SORTED waste collection
WOOD CAGE			WOOD
WOOD PALLET			Check with the competent body on how to dispose of this packaging at the recycling depot
CARDBOARD BOX	CORRUGATED CARDBOARD PAP 20	20 PAP	SORTED waste collection
CARDBOARD CORNER			PAPER
CARDBOARD SHEET			Check the instructions of the competent body
APPLIANCE BAG	POLYETHYLENE LD-PE 04	04 PE-LD	SORTED waste collection
BAG OF ACCESSORIES			PLASTIC
BUBBLE WRAP			Check the instructions of the competent body
PROTECTIVE SHEET			
LABELS			
POLYSTYRENE	POLYSTYRENE PS 06	06 PS	SORTED waste collection
FOAM PEANUTS			PLASTIC
			Check the instructions of the competent body
STRAP	POLYPROPYLENE PP 05 POLYESTER PET 01	05 PP 01 PET	SORTED waste collection
TAPE			PLASTIC
			Check the instructions of the competent body.
SCREWS	IRON FE 40	40 FE	SORTED waste collection
STAPLES FOR STRAP			METAL
FASTENING BRACKET			Check with the competent body on how to dispose of this packaging at the recycling depot

4-UNPACKING

Handle the product with suitable means paying attention to the applicable safety regulations in force. Do not turn the packaging over and handle the majolica parts with care.

The stove is delivered in one package for the structure and one for the Grès cladding and various accessories. Open the package, remove the cardboard, polystyrene and any straps and position the stove in the preset place making sure that it complies with the requirements. The stove body or unit must always be kept in a vertical position when handled, and handled using trolleys only. Pay particular attention to the door and its glass, protecting them from mechanical knocks that would compromise their integrity.
If possible, unwrap the stove near the chosen area of installation.
The packaging materials are neither toxic nor harmful.

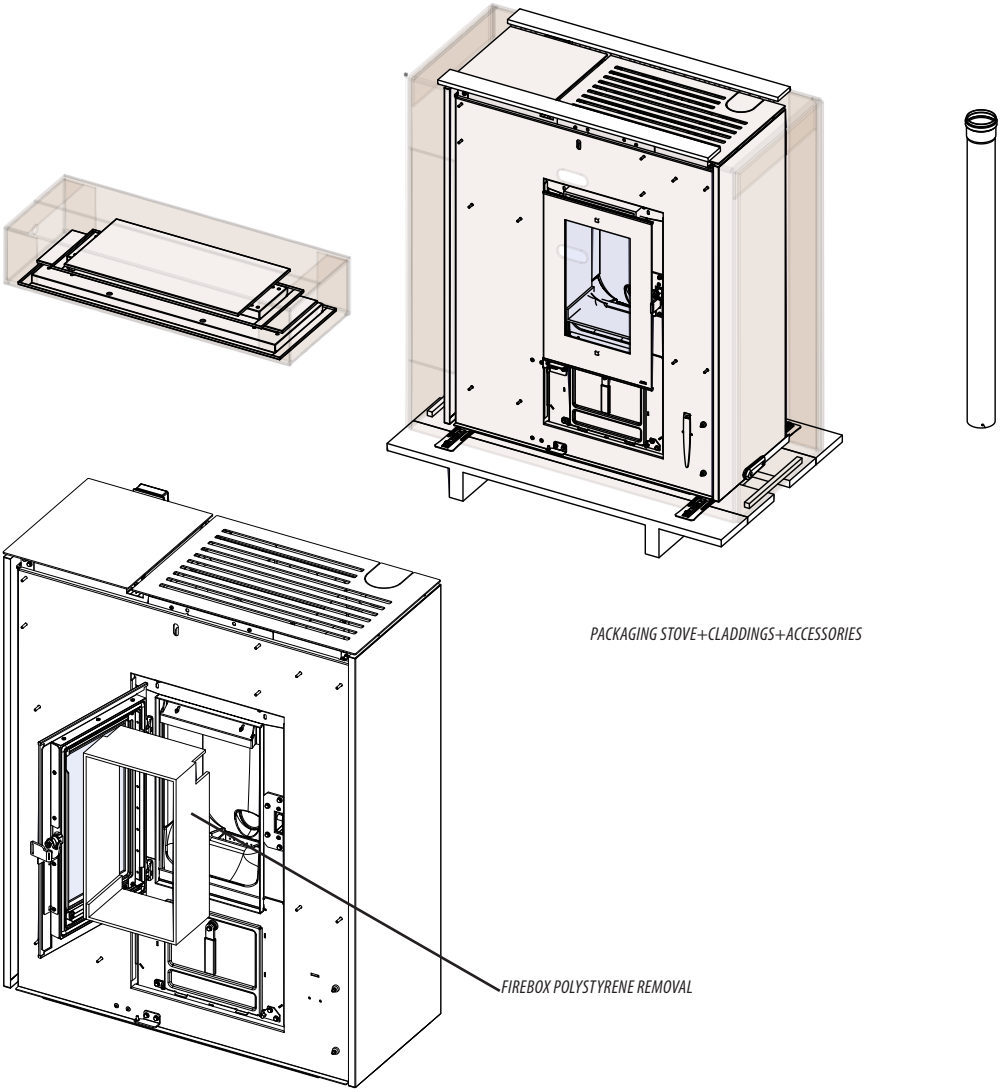

Technical Dept. - All rights reserved - Reproduction prohibited

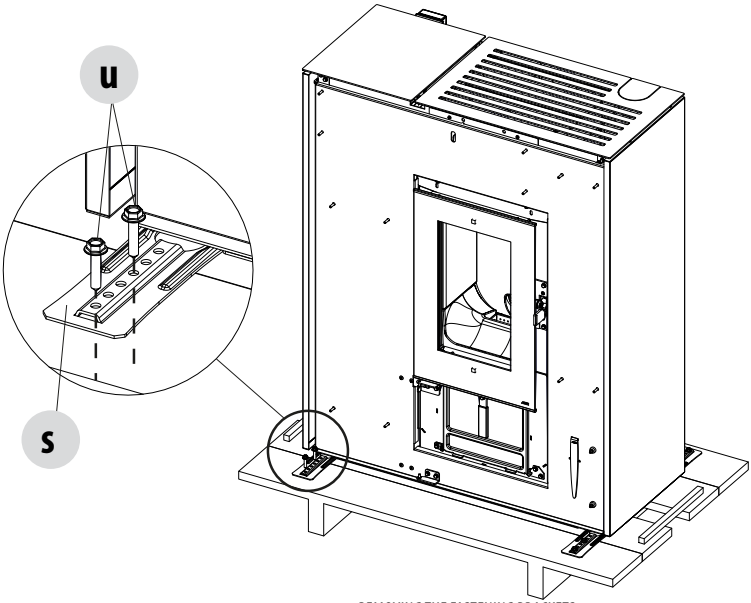

REMOVING THE FASTENING BRACKETS

To remove the stove from the pallet, you must remove the two screws "u" and plate "s" from the stove's foot. There are four brackets "s". Moreover, at the back of the stove, remove bracket "t" by taking out the two screws "v" and the two screws "z".

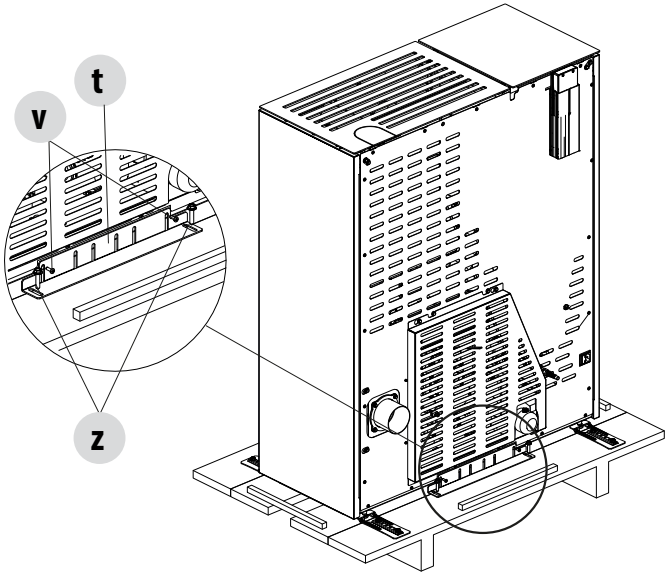

4-UNPACKING

Position the stove and connect it to the flue. Use the 4 adjustable feet **(J)** to get the stove correctly levelled so that the smoke outlet is lined up with the connecting pipe.
If the stove needs to be connected to an outlet pipe which goes through the rear wall (to connect to the flue), take utmost care to make sure that the joint is not forced.

If the stove smoke outlet is forced or used improperly to lift it or position it, the operation of the stove can be damaged irreparably.

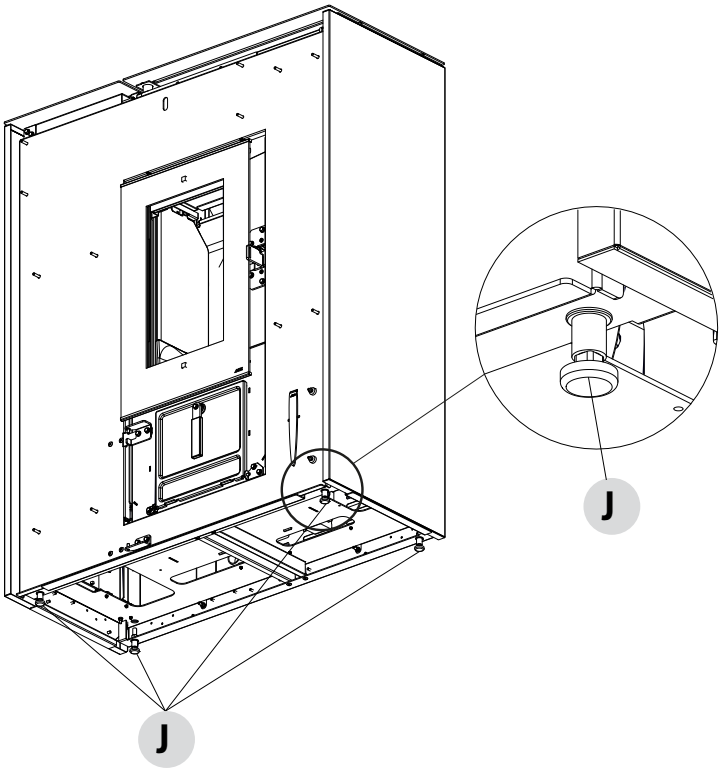

1. TURN THE FEET CLOCKWISE TO LOWER THE STOVE
2. TURN THE FEET ANTICLOCKWISE TO RAISE THE STOVE

Technical Dept. - All rights reserved - Reproduction prohibited

5-CONNECTION OF THE TOP SMOKE OUTLET PIPE

TOP OUTLET (code 7126021)

The stove frame is the same for both top and rear outlet versions. If installation with upper smoke outlet is carried out, proceed as follows:

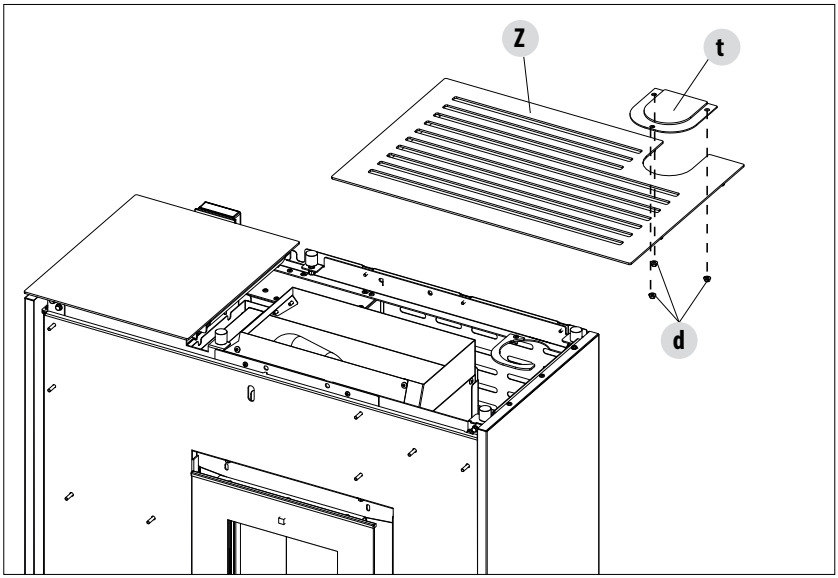

- remove the 'Z' top of the stove by simply lifting it off the housing (the pellet hopper cover remains fixed to the structure)
- remove the nuts "d" and take off the plug "t" for the smoke pipe outlet

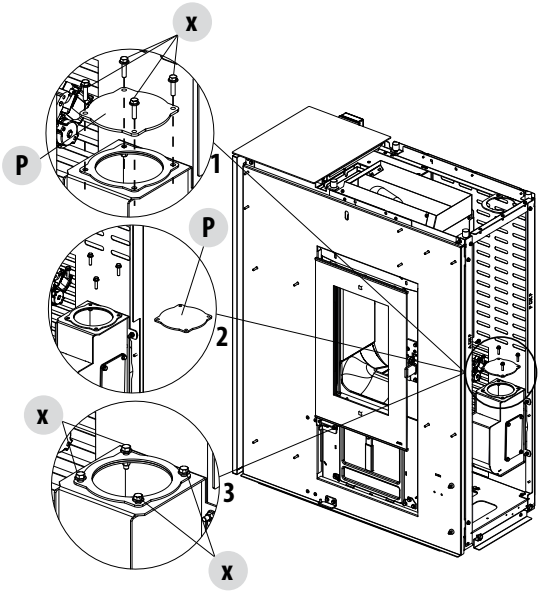

- in the internal smoke box, remove the 4 'x' screws
- remove cap 'P' (keep for rear output - see instructions on next page)
- replace the 'x' screws just removed

5-CONNECTION OF THE TOP SMOKE OUTLET PIPE

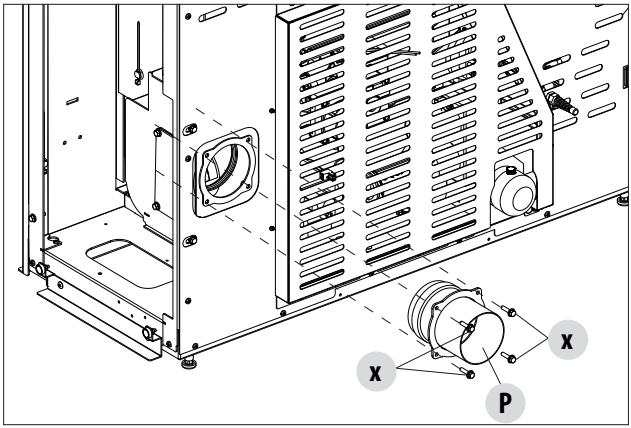

- remove the 4 screws "x" at the back of the stove
- remove pipe 'P' for the rear smoke outlet

- Take previously removed cap 'P' and put it in at the rear of the stove at the rear air outlet using the 4 screws 'x'

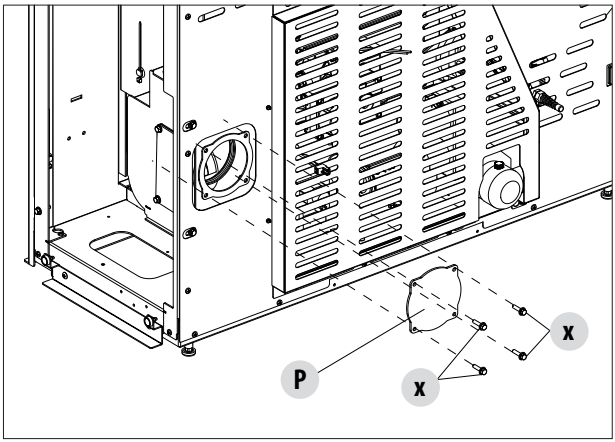

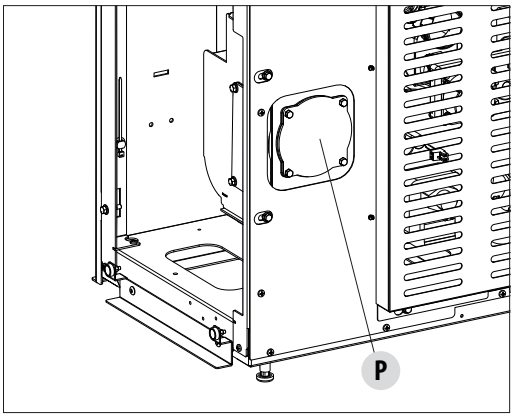

Technical Dept. - All rights reserved - Reproduction prohibited

5-CONNECTION OF THE TOP SMOKE OUTLET PIPE

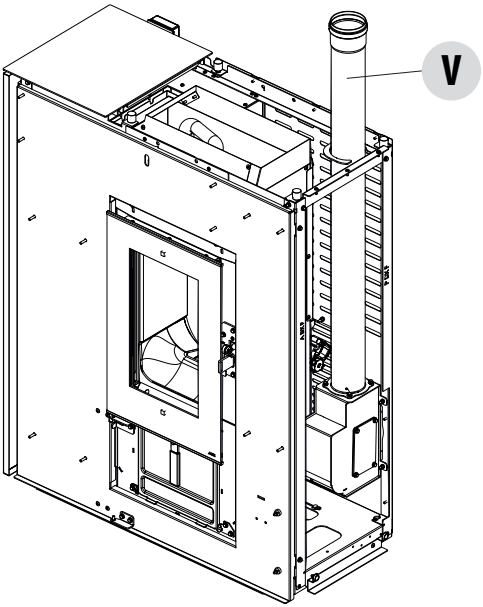

- insert the "V" tube all the way down into the coupling in the stove frame

- from the material supplied with the stove, take flange "K" and the two screws "x"
- tighten screw "x on the flange "K" against the pipe "V" to prevent the pipe from vibrating.
- make the necessary connections to the flue
- reassemble the "Z" top

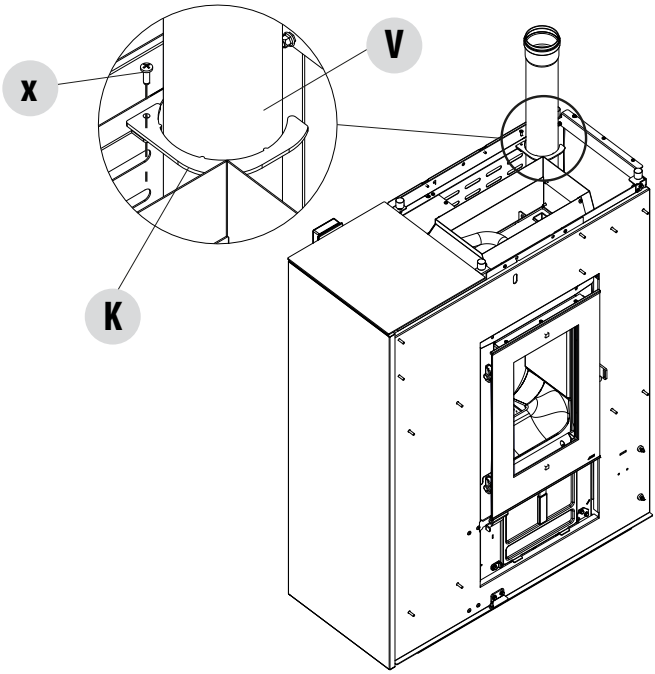

REAR OUTLET (code 7126020)
The structure of the stove is already prepared for the rear smoke outlet.

6-TOP AND SIDE PANELS DISASSEMBLY

HOW TO REMOVE THE TOP

To remove the 'T' top, simply lift it from the four dampers 'o' that it rests on and store it in a safe place.

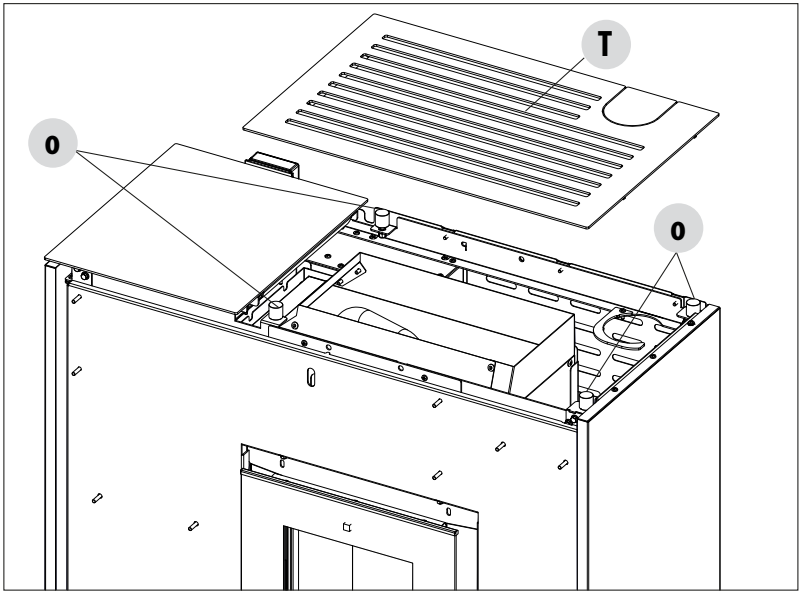

6-TOP AND SIDE PANELS DISASSEMBLY

HOW TO REMOVE THE SIDE PANELS

To remove the side panels "P" and "U" proceed as follows:

- remove the three "x" screws and the three "s" washers from the top

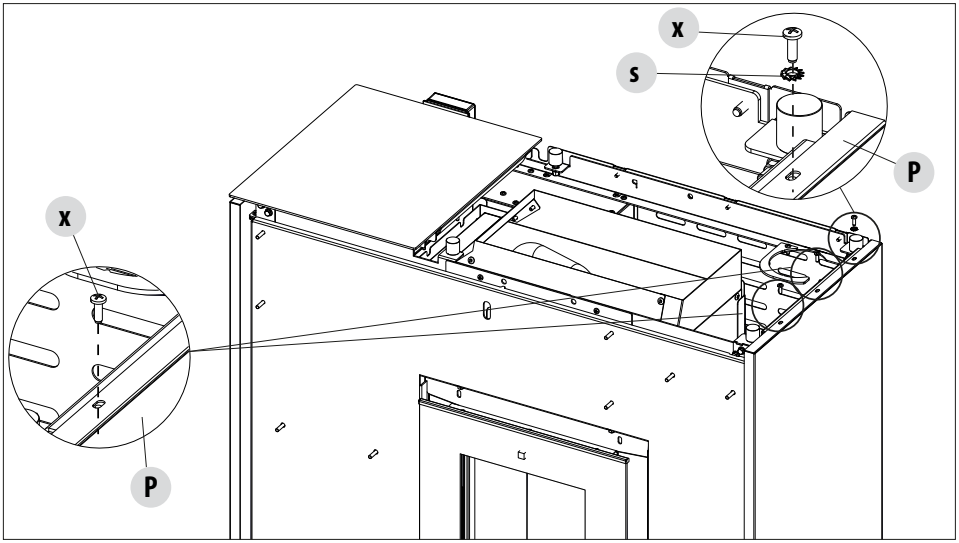

- exert slight force to detach side 'P' from the magnets 'v' in the bottom of the stove

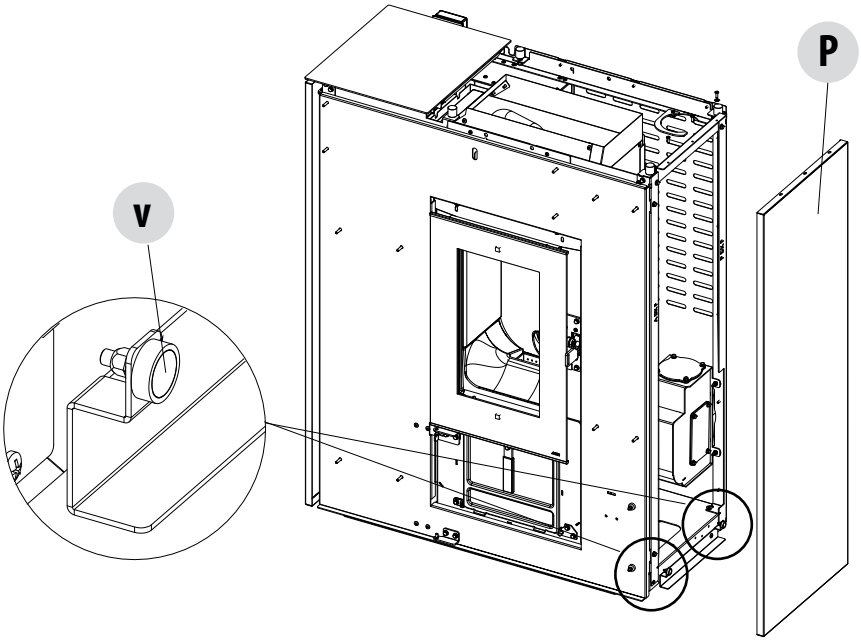

- Proceed in the same way also to remove left panel "U"

Caution! To remove the screws on the 'U' side, lift up the pellet hopper cover.

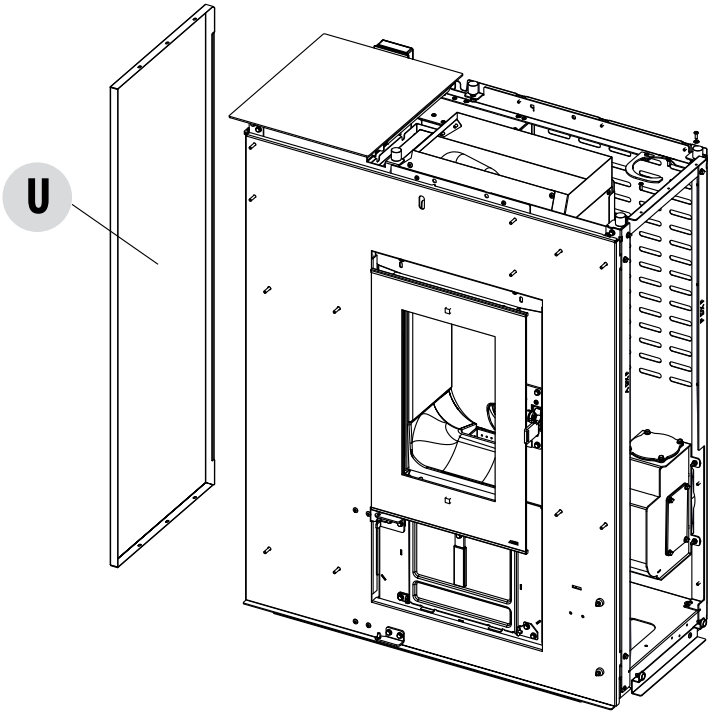

Technical Dept. - All rights reserved - Reproduction prohibited

7-HOW IT ARRIVES

Upon delivery, the stove has no Grès or "Custom" front cladding. The assembly procedure is the same for both the rear and top smoke outlet.
The following are indications for installing the cladding and removing some parts of the stove for technical interventions, parts replacement and/or cleaning.

Live electrical parts: only power the product once it has been fully assembled.

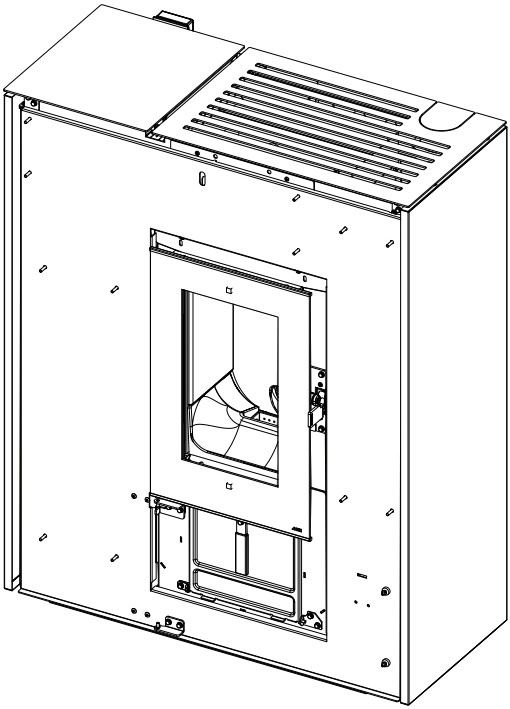

GRES MATERIA CLADDING (CORTEN/DOVE GREY/LEAD)

In the case of 'Materia' claddings, the side panels are ready for installation

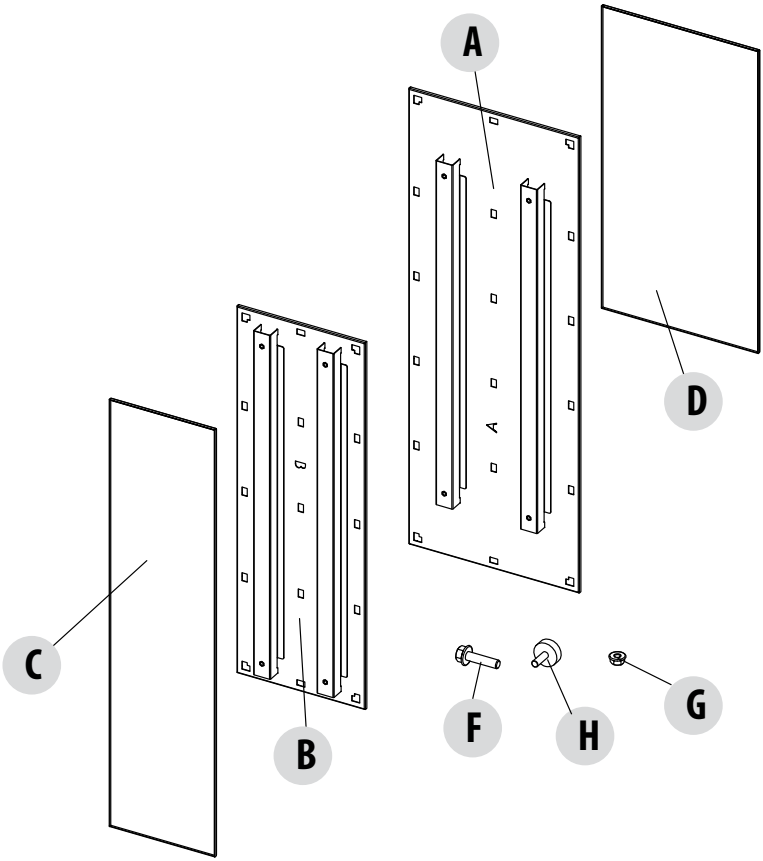

Caution! The decorative parts are delicate, therefore handle with care.

POS.	DESCRIPTION	No.		POS.	DESCRIPTION	No.
A	GRES SIDE A	1		F	M5X20 HEX HEAD SCREW	12
B	GRES SIDE B	1		G	M4 FLANGED NUT	2
C	GRES SIDE C	1		H	MAGNET Ø15-M4X12	2
D	GRES SIDE D	1				

Technical Dept. - All rights reserved - Reproduction prohibited

METAL NERO CLADDING

In the case of 'Metal nero' claddings, the side panels are ready for installation

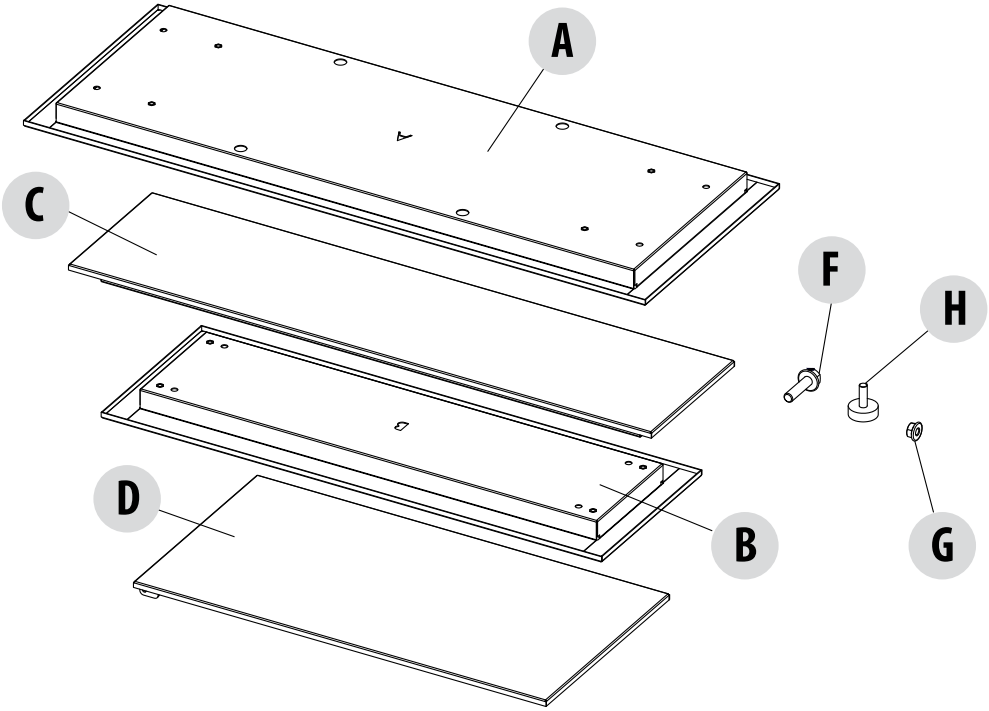

Caution! The decorative parts are delicate, therefore handle with care.

POS.	DESCRIPTION	No.		POS.	DESCRIPTION	No.
A	METAL NERO SIDE PANEL A	1		F	M5X20 HEX HEAD SCREW	12
B	METAL NERO SIDE PANEL B	1		G	M4 FLANGED NUT	2
C	METAL NERO SIDE PANEL C	1		H	MAGNET Ø15-M4X12	2
D	METAL NERO SIDE PANEL D	1				

7-HOW IT ARRIVES

CUSTOM CLADDING

The customised stoneware cladding consists of an iron frame and a panel purchased separately by the customer.
The 'Custom' version requires a fixing and resting time of the chosen material (by the customer) before proceeding with assembly operations.

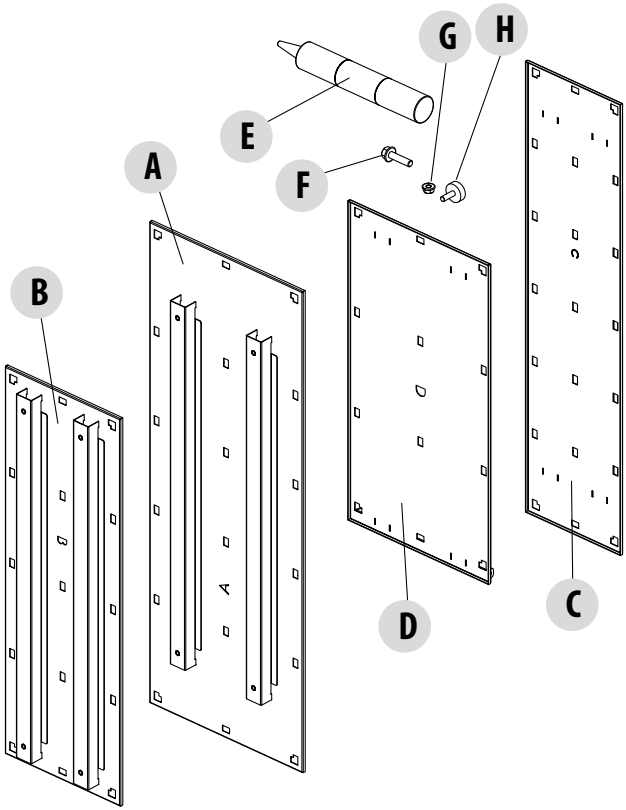

Caution! The decorative parts are delicate, therefore handle with care.

POS.	DESCRIPTION	No.		POS.	DESCRIPTION	No.
A	SIDE PANEL A	1		E	HIGH TEMPERATURE SILICONE	1
B	SIDE PANEL B	1		F	M5X20 HEX HEAD SCREW	12
C	SIDE PANEL C	1		G	M4 FLANGED NUT	2
D	SIDE PANEL D	1		H	MAGNET Ø15-M4X12	2

Technical Dept. - All rights reserved - Reproduction prohibited

CUSTOM CLADDING MATERIAL CHARACTERISTICS

TECHNICAL SPECIFICATIONS	
Complies with the requirements of the European Union Regulation (EC) 1907/2006 concerning the Registration, Evaluation, Authorisation and Restriction of Chemicals (REACH).	
Water absorption ISO 10545-3:	≤ 0.3%
Breaking force in N (sample 200x300 mm) ISO 10545-4:	average value 700
Flexural strength in N/mm^2 (sample 200x300 mm) ISO 10545-4:	average value 90
UNIEN101 Mohs scale hardness:	class 5 to 7
Deep abrasion resistance ISO 10545-6:	≤ 175 mm^3
Coefficient of linear thermal expansion 10-6/°C:	average value 6,6
Resistance to thermal shock ISO 10545-9:	resists
Chemical resistance ISO 10545-13:	class A to B
Stain resistance ISO 10545-14:	class 4 to 5
Frost resistance ISO 10545-12:	resists
Reaction to fire EN 13501:	A2 - s1, d0
Release of toxic/harmful substances ISO 10545-15:	No release

8-CUSTOM CLADDING PREPARATION

STONEWARE SLAB CUTTING MEASUREMENTS (BY CUSTOMER)

For the characteristics of the cladding to be used, see the technical data table on the previous page.

SIDE A

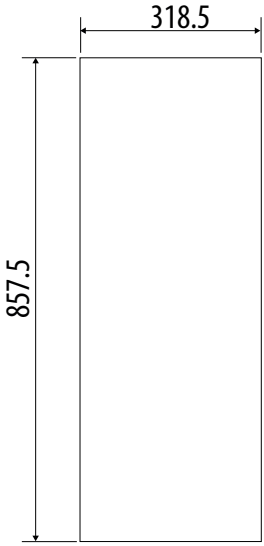

PORCELAIN STONEWARE MATERIAL THICKNESS 3.5 MM

ON THE NON-VISIBLE SURFACE APPLY BREAK-RESISTANT GLASS FIBRE MESH

FINISHING OF EDGES THAT ARE NOT SHARP OR POINTED

THE VISIBLE SURFACE MUST BE FREE OF SCRATCHES, CREASE MARKS, IMPERFECTIONS AND ANY STREAKS

SIDE B

SIDE C

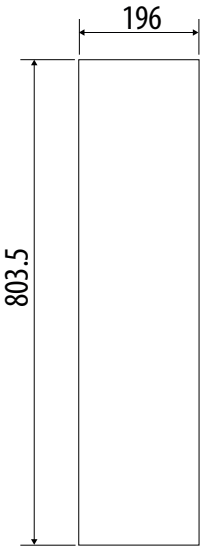

PORCELAIN STONEWARE MATERIAL THICKNESS 3.5 MM

ON THE NON-VISIBLE SURFACE APPLY BREAK-RESISTANT GLASS FIBRE MESH

FINISHING OF EDGES THAT ARE NOT SHARP OR POINTED

THE VISIBLE SURFACE MUST BE FREE OF SCRATCHES, CREASE MARKS, IMPERFECTIONS AND ANY STREAKS

SIDE D

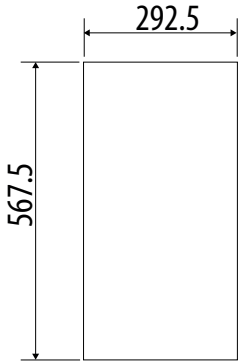

Technical Dept. - All rights reserved - Reproduction prohibited

8-CUSTOM CLADDING PREPARATION

ADHESIVE LAYOUT

To glue the cladding to the iron frame, proceed as follows:

- distribute the adhesive (high-temperature silicone "E" supplied) on the outside of the frame avoiding adhesive at the edges by approximately 10 mm
- lay the cladding slab on top of the frame, taking care to centre the frame and leave the visible part facing outwards
- on the back, at the holes in the frame, apply silicon to the openings
- apply pressure evenly until the glue dries (approx. 24 hours)
- proceed with the assembly of the side panels as per the instructions

SIDE A

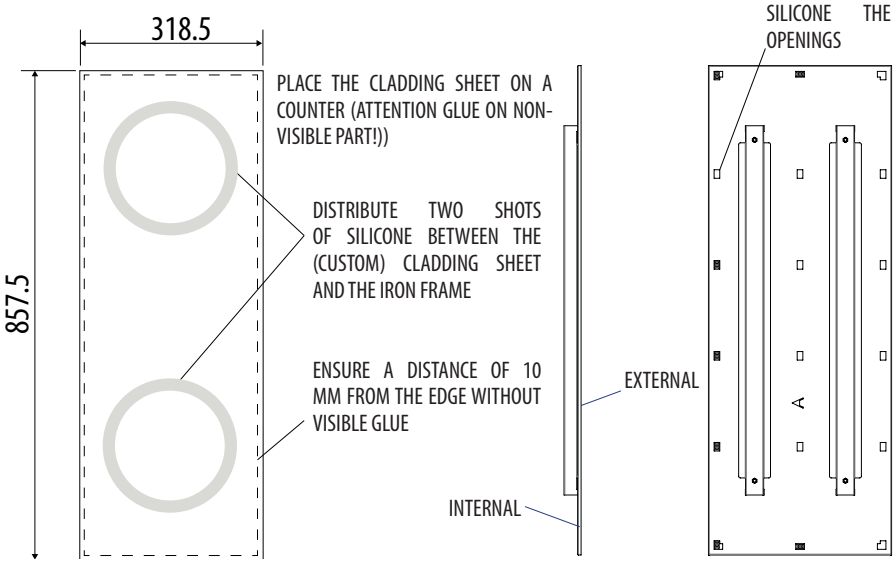

SIDE B

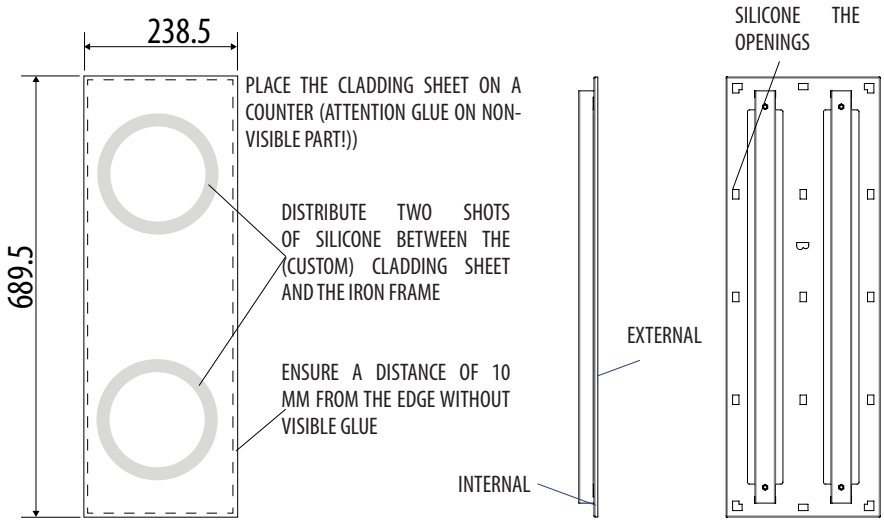

8-CUSTOM CLADDING PREPARATION

SIDE C

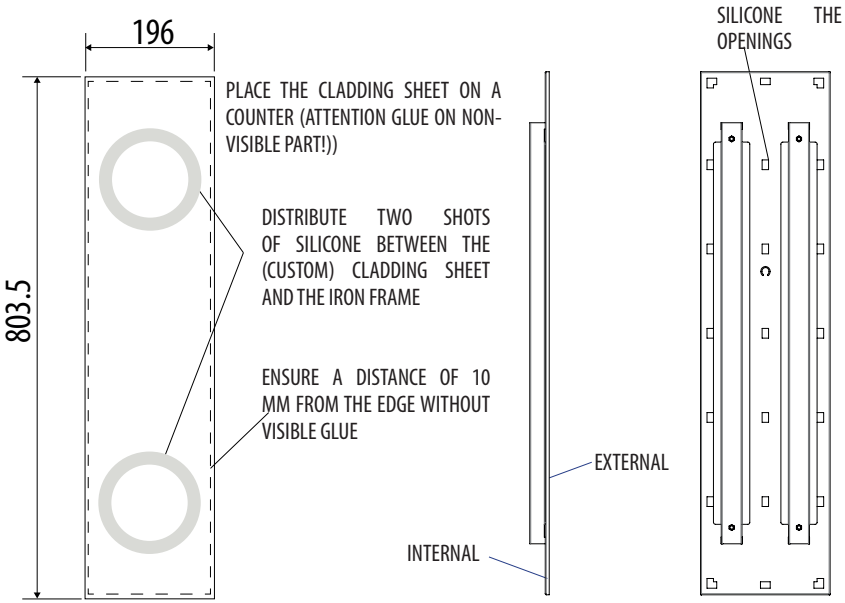

SIDE D

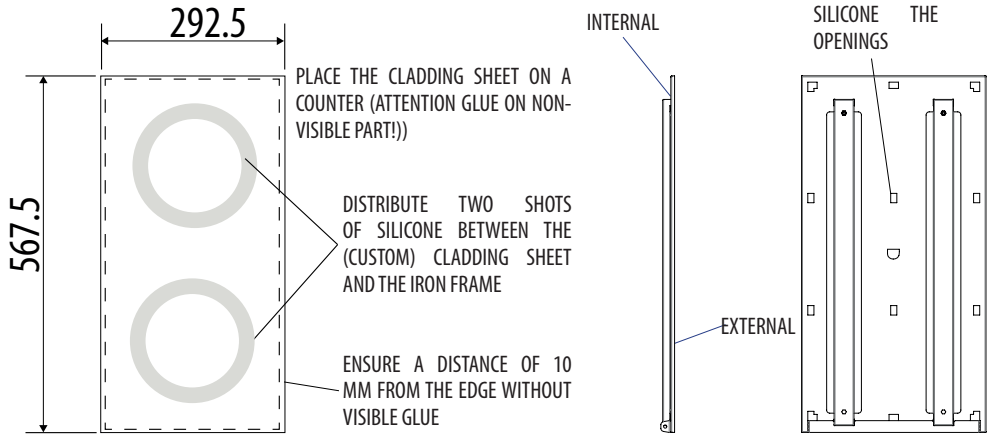

Technical Dept. - All rights reserved - Reproduction prohibited

9-CLADDING ASSEMBLY

Caution! The cladding installation phases are the same for "MATERIA", "METAL NERO" and "CUSTOM" stoneware cladding prepared by the customer.

FRAME REMOVAL

To secure the cladding, the 'R' frame must be removed by removing the four 'x' screws.

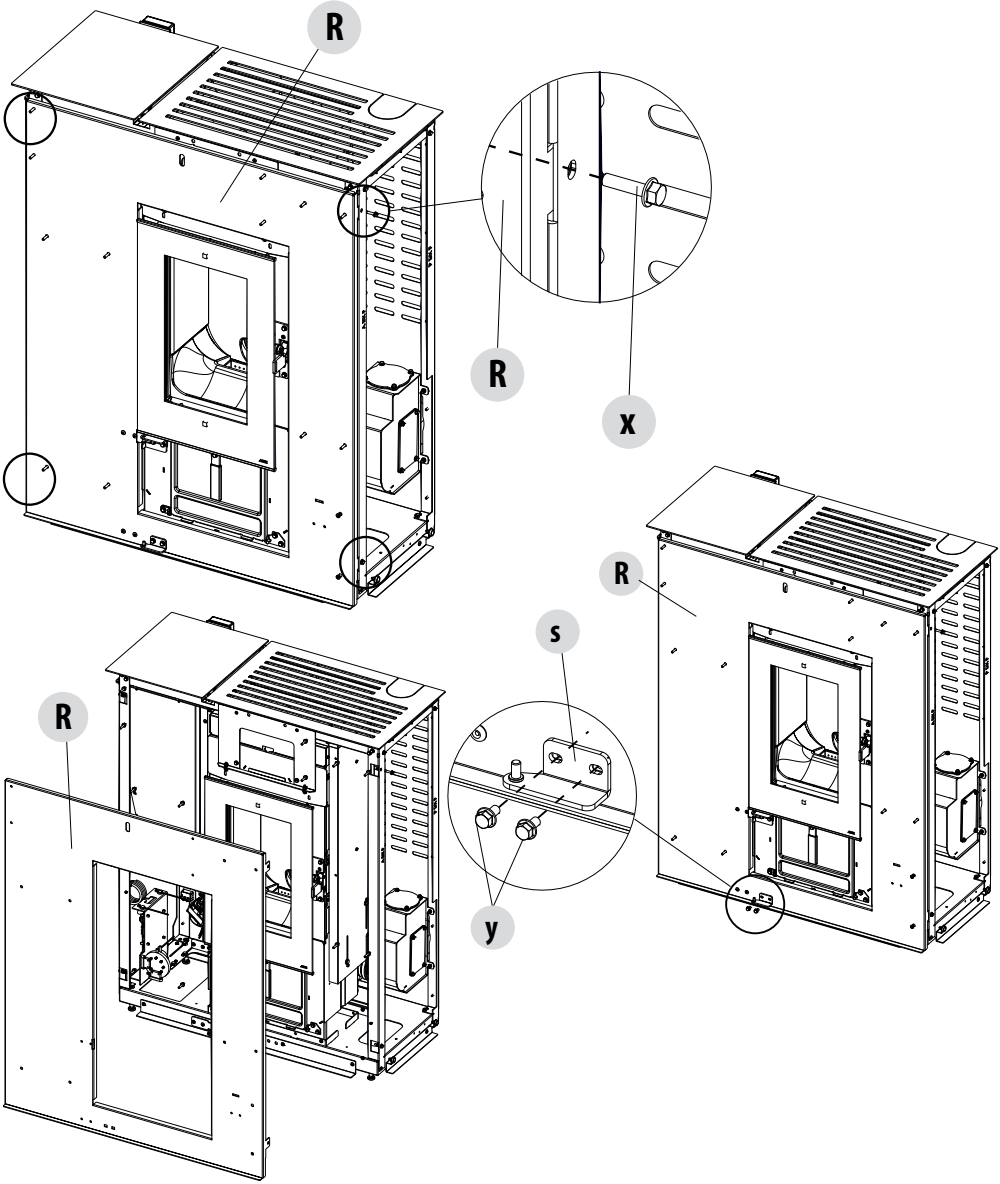

9-CLADDING ASSEMBLY

CLADDING ASSEMBLY

- take side 'A' and four screws 'F' from the packaging
- secure side 'A' to frame 'R' using the four screws 'F'

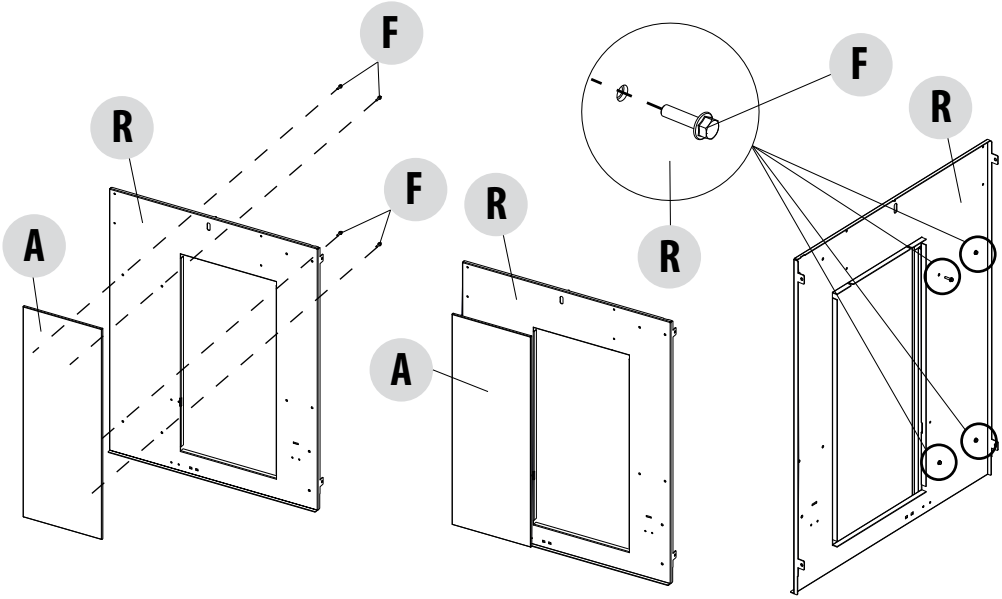

- take side 'B' and four screws 'F' from the packaging
- secure side 'B' to frame 'R' using the four screws 'F'

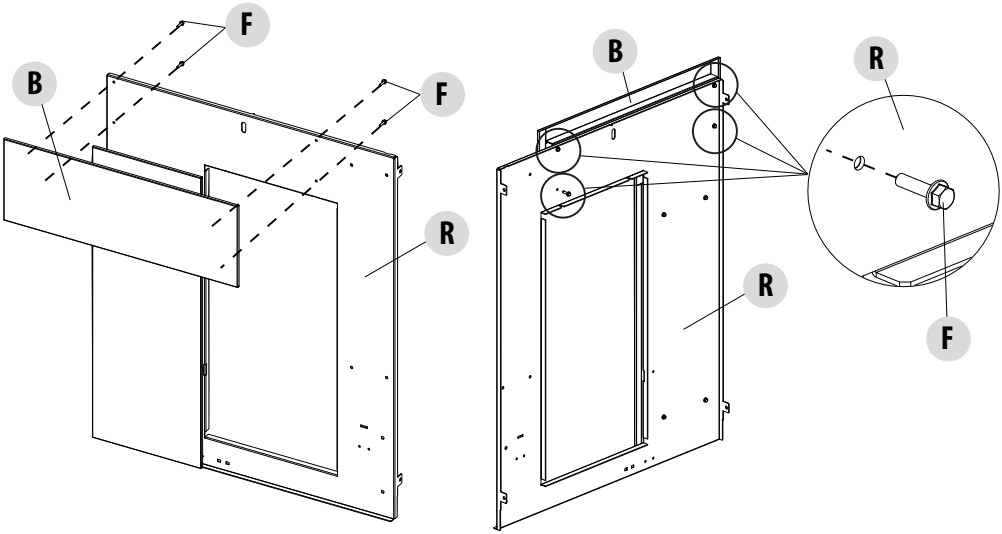

Technical Dept. - All rights reserved - Reproduction prohibited

9-CLADDING ASSEMBLY

- sides 'A' and 'B' are mounted on the 'R' frame

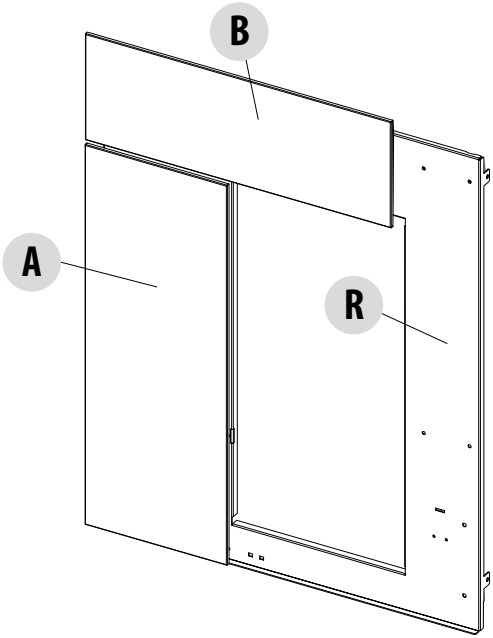

- take side 'C' and four screws 'F' from the packaging
- secure side 'C' to frame 'R' using the four screws 'F'

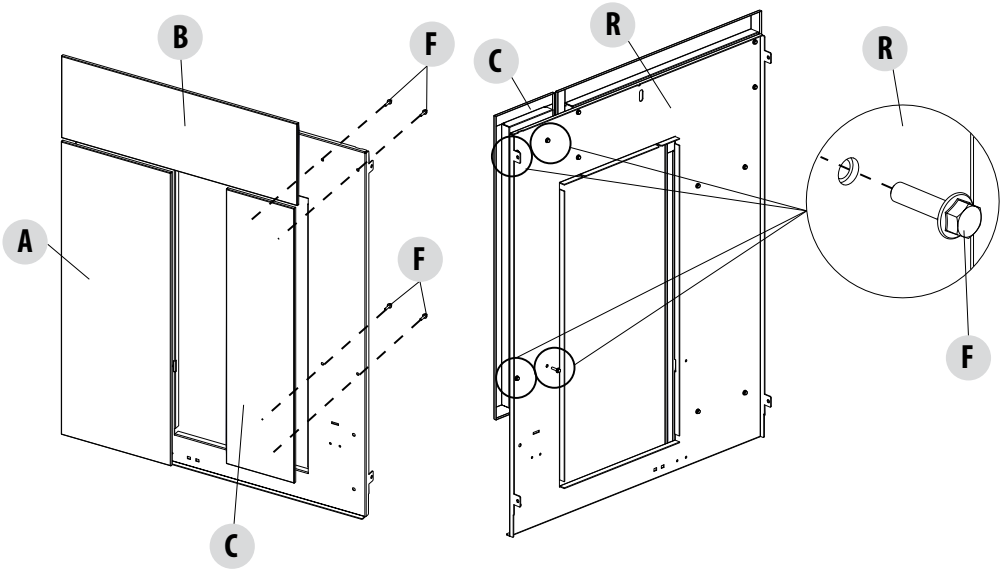

9-CLADDING ASSEMBLY

- side 'C' is fitted

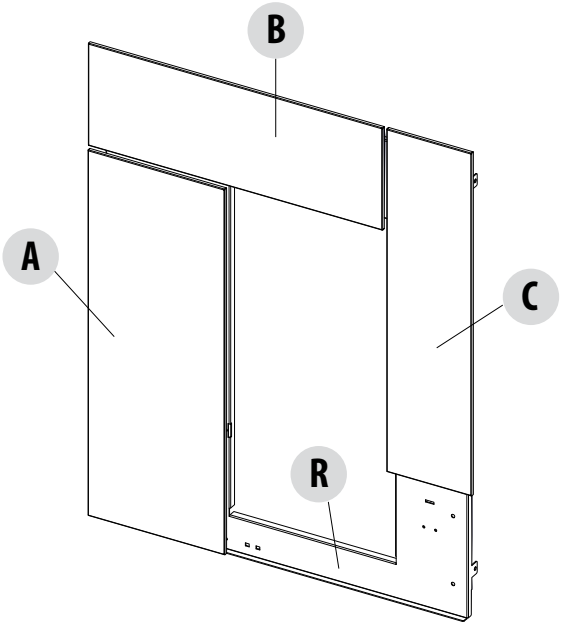

- fasten frame "R" with cladding "A"/"B"/"C" to the stove frame using the four previously removed screws "x"

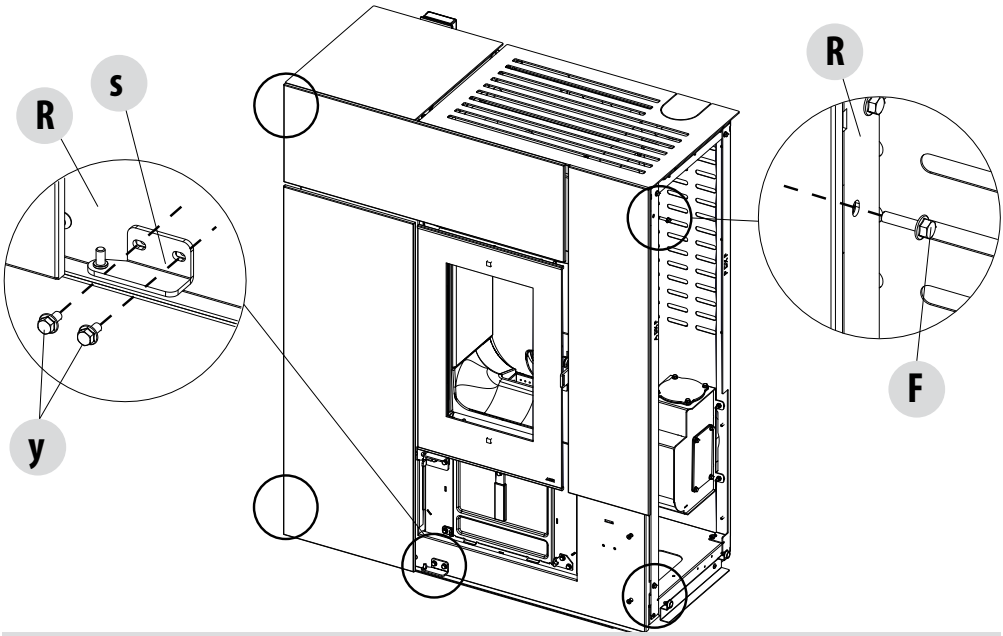

Technical Dept. - All rights reserved - Reproduction prohibited

9-CLADDING ASSEMBLY

LOWER DOOR ASSEMBLY

- Take door 'D', two nuts 'G' and two magnets 'H' from the cladding packaging
- slip the nut "G" over the magnet "H" and fasten them on the door "D" on the opposite side of the door insertion bracket to the stove frame

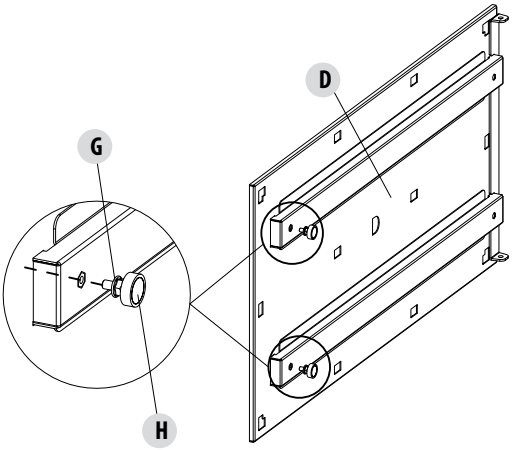

MATERIA CLADDING

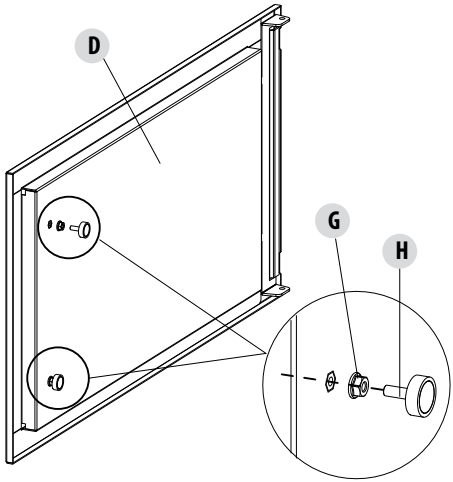

METAL NERO CLADDING

- on the stove remove bracket "K" at the top by removing the two screws "y"

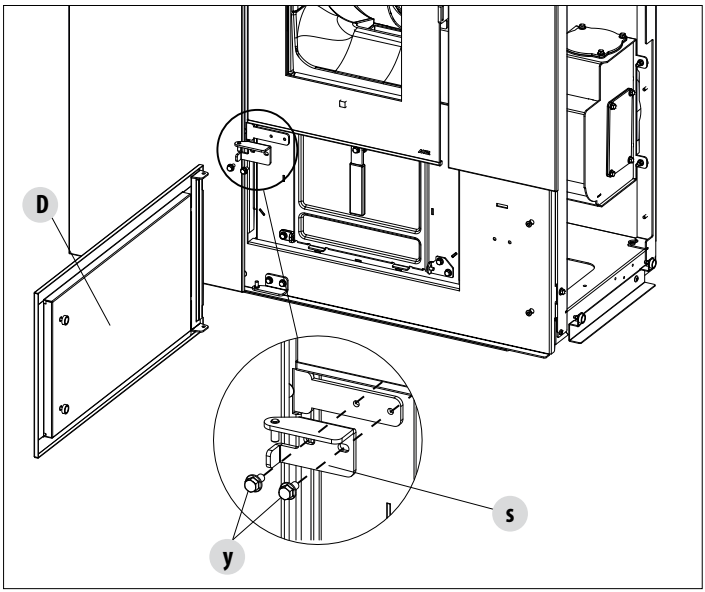

9-CLADDING ASSEMBLY

- slide the 't' hook onto the bracket on the stove (see drawings on previous page)
- slide the newly-removed bracket "K" onto the upper part of the door "D" and fasten everything to the stove by the two screws "y"

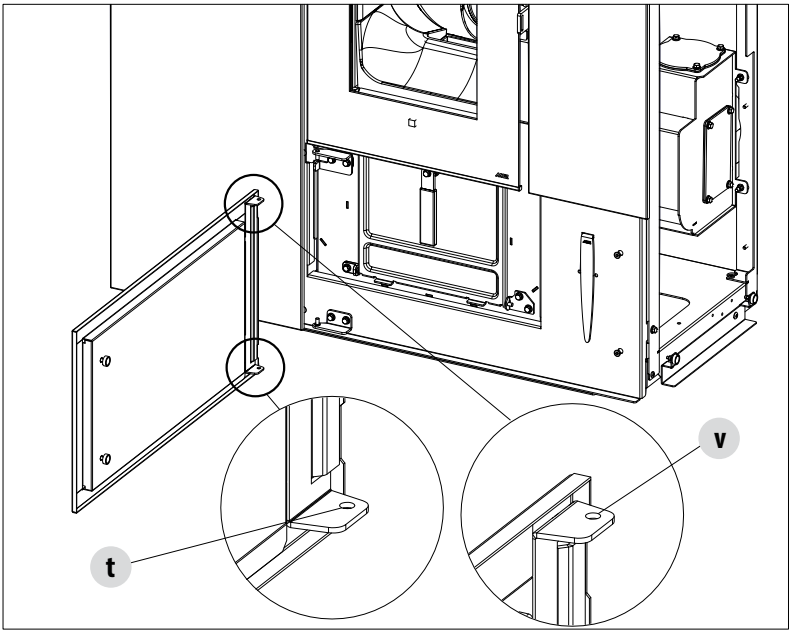

- the lower 'D' door is now fitted
- it is possible to adjust the closing of the door by adjusting the two 'H' magnets

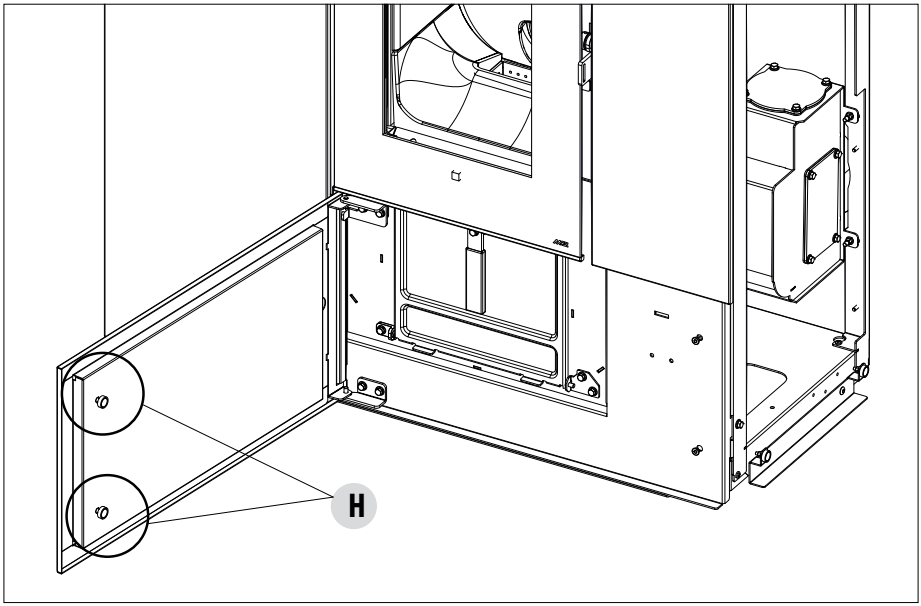

Technical Dept. - All rights reserved - Reproduction prohibited

9-CLADDING ASSEMBLY

- at this point the two 'U'/'P' sides and the 'T' top can be put back in place

Caution! When mounting side panels 'U' and 'P', check that the air pipe fits into the seat provided on the side panel at the bottom (insert from the front, do not tilt the side)

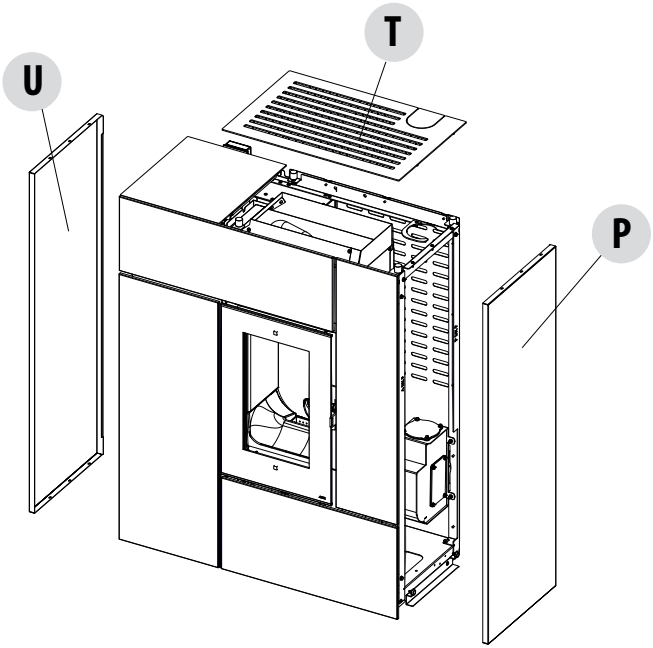

10-OPENING DOORS

To open the firebox door "Q" insert the cold handle "Z" into the slot and pull it towards you.
Cold handle 'Z' is located in the lower part of the stove by opening the lower door 'D'.

Attention! Only open the doors when the stove is switched off and cold.

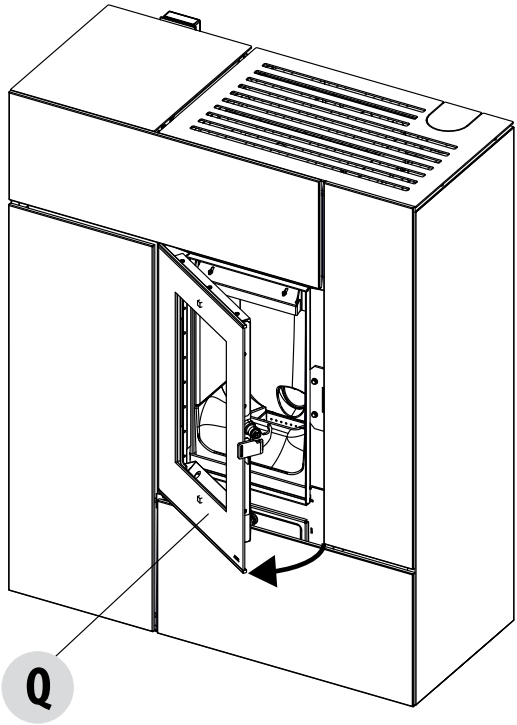

To open the lower door 'D' grab it at the side and pull it towards you

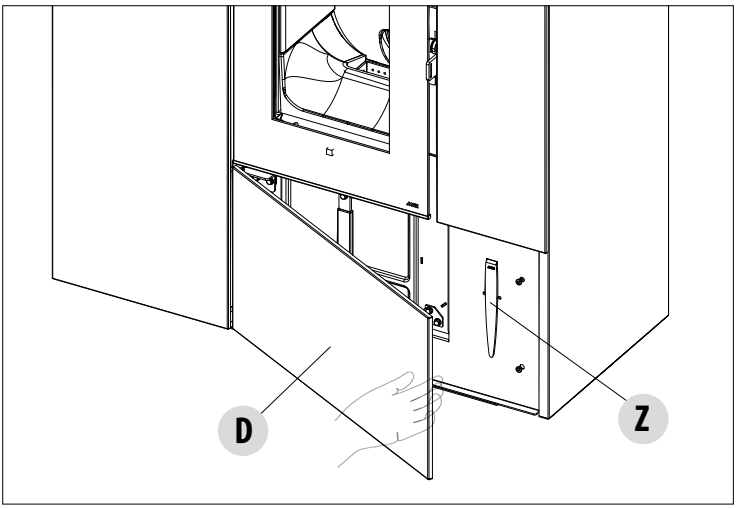

Technical Dept. - All rights reserved - Reproduction prohibited

11-PELLET COVER

PELLET COVER OPENING

Lift up cover 'T' by sliding rod 'g', which stops the door. Raise cover 'T' until the wheel of rod 'g' enters the stop (indicated by the arrow), at which point door 'T' does not risk falling. To close it again, lift door 'T' so that the wheel on rod 'g' can slide all the way shut.

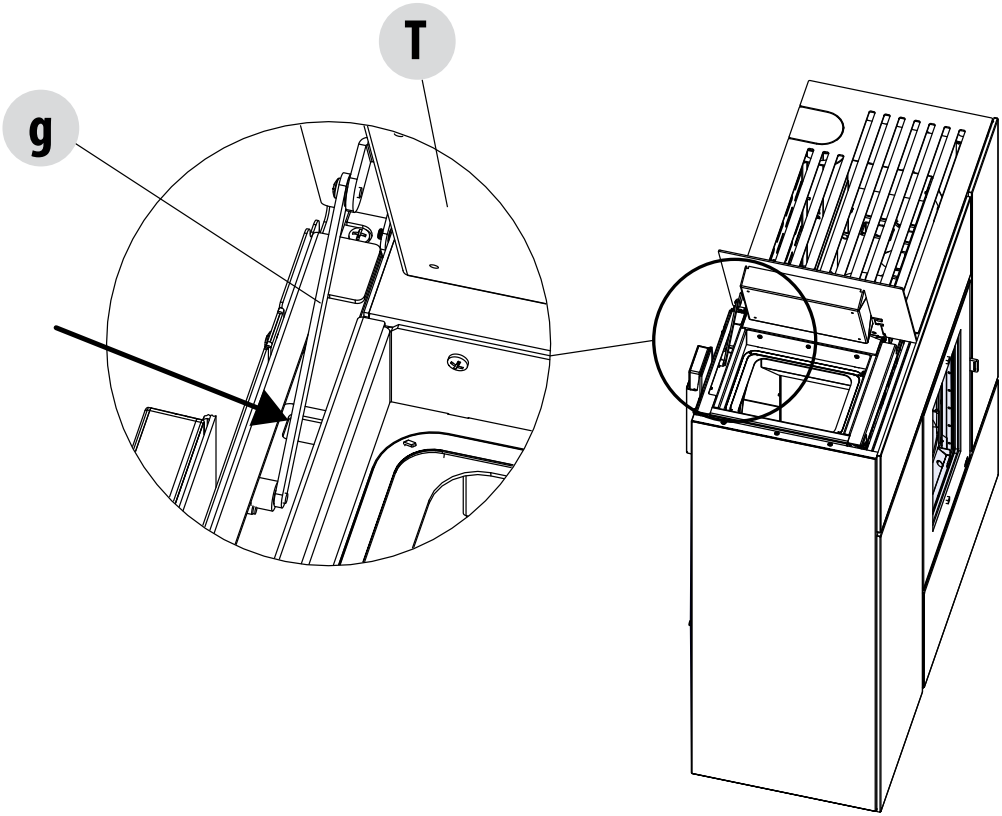

12-ELECTRICAL CONNECTION

ELECTRICAL CONNECTION

First connect the power cable to the back of the stove and then to a wall socket.

It is recommended to disconnect the power cable when the stove is not used.

The cable must never come into contact with the smoke exhaust pipe or any other part of the stove.

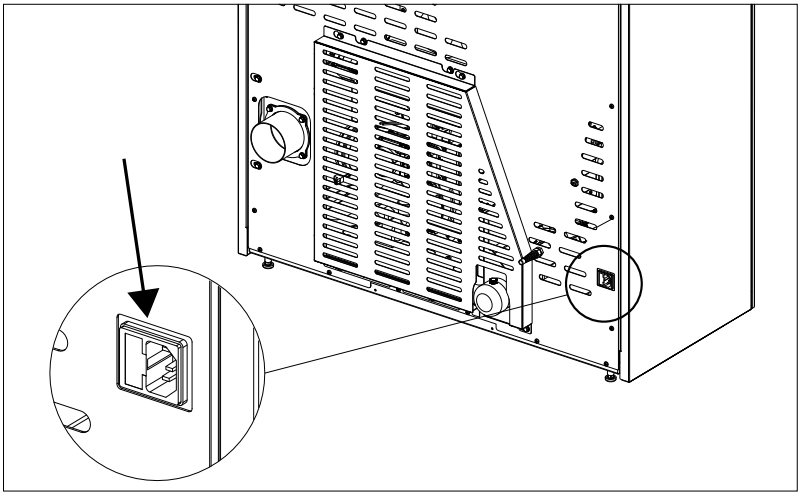

ELECTRICAL STOVE CONNECTION

STOVE POWER SUPPLY

Connect the power cable to the back of the stove and then to a wall socket. The stove is then powered.
There is a fuse box also in the switch block next to the power socket. Open this compartment by simply lifting the cover, using a screwdriver as a lever from inside the power outlet compartment. Inside there are two fuses (5x20 mm T delayed / 3.15 A 250 V), which may need to be replaced if the stove is not powered (e.g. the control panel display does not light up) - operation to be implemented by a qualified technician.

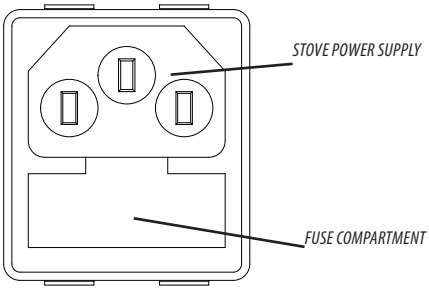

ATTENTION!
All cleaning and / or replacement of parts must be carried out with the power plug disconnected.
Disconnect the product from the 230V power supply before performing any maintenance operations.
If the cable is damaged, replace it.

Technical Dept. - All rights reserved - Reproduction prohibited

13-LOADING PELLETS

LOADING THE PELLETS

Fuel is loaded from the upper part of the stove.
Pour the pellets in slowly so that they are deposited at the bottom of the hopper.

If loading pellets when the stove is running, open the door of the hopper using the cold handle supplied.
When loading, do not let the pellet bag come into contact with hot surfaces.
No other type of fuel other than pellets is to be inserted into the hopper, in compliance with above-mentioned specifications. Store the spare fuel at an adequate safe distance.
Do not pour pellets directly onto the brazier but only into the hopper.
When the appliance is running and when it is turned off, most of the stove surfaces are very hot (door, handle, glass, smoke outlet pipes, etc.). Therefore it is recommended to avoid coming into contact with these parts.

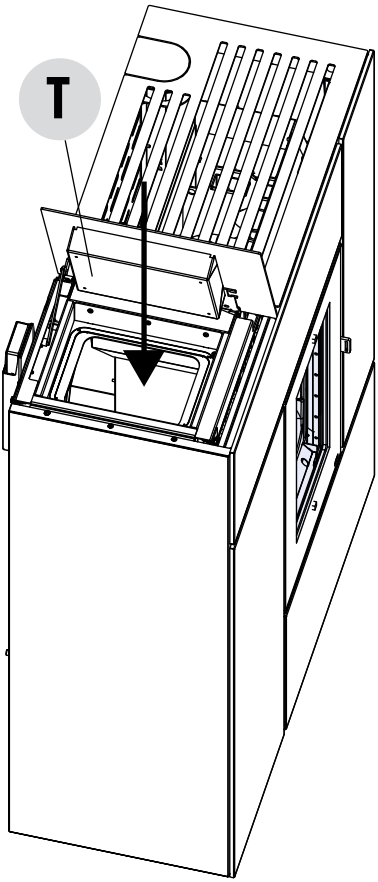

MCZ GROUP S.p.A.
Via La Croce n°8
33074 Vigonovo di Fontanafredda (PN) – ITALY
Telephone: 0434/599599 a.s.
Fax: 0434/599598
Internet: www.mcz.it
e-mail: mcz@mcz.it

8902616200 REV.0 05/06/2026