INSTALLATION GUIDE

GB

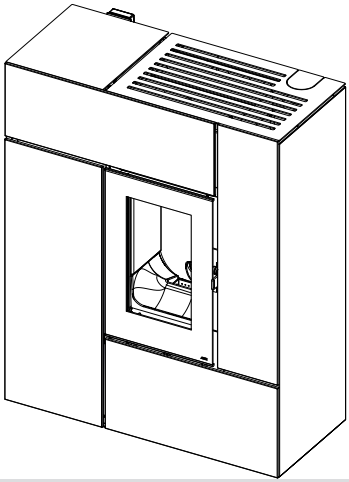

SEALED PELLET STOVE

FEEL AIRMATIC 10 M1 CORE
FEEL AIRMATIC 10 UP! M1 CORE

PART 2 - OPERATION AND CLEANING

Translation of original instructions

MCZ

8902616300

TABLE OF CONTENTS

TABLE OF CONTENTS II
14-COMBUSTION WITH CORE TECHNOLOGY III
15-FIRST START-UP 4
16-GRAPHIC PANEL 5
17-DISPLAYS 7
18-OPERATING MODES 10
19-SELECTING THE OPERATING MODES 14
20-MANUAL MODE 15
21-AUTO MODE 16
22-COMFORT MODE 17
23-OVERNIGHT MODE 18
24-TURBO MODE 19
25 - FANS 20
26-SILENT MODE 22
27-START&STOP 23
28-CHRONO-SLEEP 26
29 - WI-FI/WPS/BLUETOOTH 35
30-SHUTDOWN 38
31-EXTRA DISPLAYS 39
32-USER MENU 42
33-PELLET LEVEL SENSOR 47
34-EXTERNAL THERMOSTAT 48
35-SAFETY DEVICES 49
36-ALARMS 50
37-RECOMMENDATIONS FOR SAFE USE 54
38-CLEANING 55
39-TROUBLESHOOTING 64
40-CIRCUIT BOARD 67

14-COMBUSTION WITH CORE TECHNOLOGY

The **CORE** technology uses a different combustion principle than normal pellet stoves, maximising the calorific supply from the fuel and minimising pollutant emissions, which are well below the most restrictive regulatory limits in force.
Compared to a conventional pellet stove, CORE combustion is characterised by the slow burning of the flame and the presence of light blue flames at the base, especially in the early stages of ignition.
The presence of the fuel at a much lower level than the flame is a typical feature of this type of combustion principle whereby gas is generated from the pellets and burnt in several stages. The presence of several air injection points in the brazier and at the rear of the combustion chamber gives evidence of this phenomenon.
We will briefly describe the characteristics of this type of combustion so that you can fully understand how it works.

IGNITION

The ignition phase has a programmed duration in order to load the fuel at the bottom of the brazier and to create a bed of embers for gasification. After ignition, the flame will emerge from the bottom of the brazier and gradually tend to appear almost completely only at the level of the combustion chamber. In the case of particularly clean combustion, the flame will tend to be almost transparent in the early stages and then turn yellow as the temperature in the combustion chamber rises.

OPERATION

During the entire operation, the flame forms inside the combustion chamber following the user's settings in terms of power. For all adjustments possible with the MAESTRO+ panel, APP and remote control, please refer to the following chapters.

FUEL MANAGEMENT DURING OPERATION.

To generate combustion gas, it is necessary to create an accumulation of pellets at the bottom of the brazier, which may be more or less visible. The smart MAESTRO+ electronics manage this phase in a controlled and safe manner. Therefore, pauses in fuel loading may occur due to excess load detected by the sensors and longer pellet burning time. This procedure allows for the use of unalike pellets (in terms of density and type) with variable burning times. The electronics also manage the calibration of the combustion air inlet, thus ensuring optimal and clean combustion at all times.
We always recommend using A1 category and certified pellets in order to fully exploit the characteristics of the product and its very low emission levels. Poor quality pellets would compromise clean combustion even with CORE technology.

AUTOMATIC BRAZIER CLEANING

As with all MCZ stoves with MATIC automatic brazier, there is a programmed cleaning every 6 hours of continuous operation. This means that after 6 hours the stove will automatically switch off and the brazier will open to remove the residual ash. Immediately after, the stove will switch back on to ensure the room heating function. Shutdown, cleaning and re-ignition take about 20 minutes in total, during which time the product is still able to heat up thanks to the heat accumulated in its structure.

SHUTDOWN

Once product shutdown is set, fuel loading will continue for a short period and will be accompanied by increased ventilation of the combustion chamber. This procedure is useful for improving brazier cleaning and the combustion of residues. This phase lasts a few minutes and will be followed by the actual shutdown without adding pellets to the brazier. At the end of the shutdown procedure, the bottom of the brazier opens automatically and the structure cools down. The product will continue to emit heat throughout this phase, maximising the use of the burnt fuel.

CLEANING

The ash produced by this type of combustion is different than that of a conventional pellet stove. These are often solidified, carbonaceous residues that resemble small pumice stones of moderate consistency and tend to crumble with a simple touch or during suction. In contrast, the carbonaceous deposits adhering to the brazier are thin and harder with the same density as graphite (pencil tips). For cleaning operations and removal of residues, we recommend using the brush supplied as explained in the chapters on routine and extraordinary maintenance.

Technical Dept. - All rights reserved - Reproduction prohibited

15-FIRST START-UP

WARNINGS BEFORE IGNITION
GENERAL WARNINGS

Remove all parts that may burn from the brazier and the glass (manual, various adhesive labels or any polystyrene).
Check that the brazier is positioned correctly and rests properly on the base.

The first ignition may not be successful as the feed screw is empty and does not always manage to load the brazier with the required amount of pellets in time to light the flame.

CLEAR THE FAILED IGNITION ALARM FROM THE STOVE PANEL OR APP.
REMOVE THE PELLETS LEFT IN THE BRAZIER AND REPEAT IGNITION.

If, after repeated attempts, the flame fails to ignite, despite a regular flow of pellets, check the correct positioning of the brazier, which **must rest snugly against the slots.** If no anomaly is found during this inspection, there may be a problem with the product components or installation may not be correct.

REMOVE THE PELLETS FROM THE BRAZIER AND CONTACT AN AUTHORISED TECHNICIAN.

Do not touch the stove during the first start-up, as it is during this phase that the paint sets. If you touch the paint, you may expose the steel surface.

It is good practice to ensure effective ventilation in the room during the initial start-up, as the stove will emit some smoke and smell of paint.

If necessary, touch up the paint with the spray can of the specific colour.
Do not stand close to the stove and, as mentioned, air out the room. The smoke and smell of paint will disappear after about an hour of operation, however, they are not harmful in any case.

The product will be subject to expansion and contraction during the start-up and cooling stages, therefore slight creaking noises may be heard. This is perfectly normal as the structure is made of laminated steel and must not be considered a defect.

Upon **first ignition**, for the first pellet hopper, it is recommended to start the stove at maximum power so that the structure and the smell of the paint settle more quickly.
It is recommended to install the ceramic or serpentine stone cladding after the first successful ignition.

DO NOT EXPECT HEATING EFFICIENCY IMMEDIATELY!!!

16-GRAPHIC PANEL

MAESTRO GRAPHIC PANEL

The "foldaway" panel is located at the back of the product. Grasp the panel at the sides with your hand and lift it. The panel will block in the raised position. The display is graphic only while the controls are "soft touch"

Attention! It is advisable to put the panel in the "HIDDEN" position while loading the pellet.

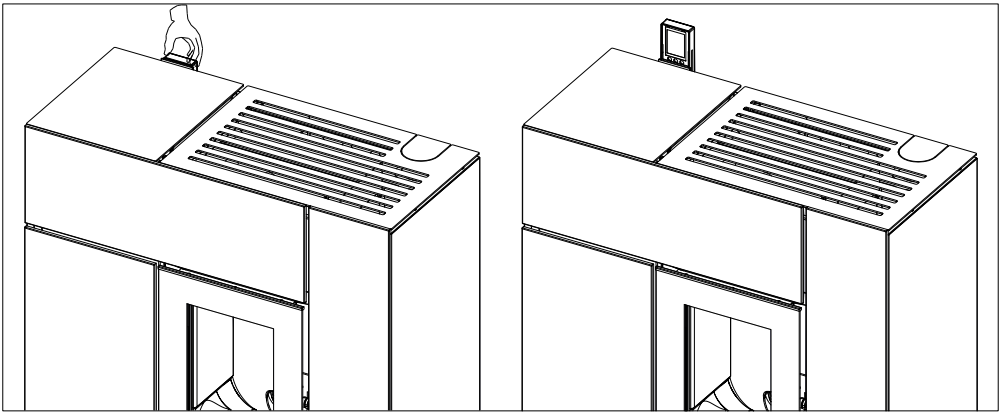

16-GRAPHIC PANEL

KEY FUNCTIONS

+ −	CONTROL AND MENU SCROLLING KEYS		FAN CONTROL MENU
	NAVIGATION IN THE DIFFERENT OPERATING MODES (PROGRAMMES)		ON/OFF AND CONFIRMATION OF MENU CHOICES
	START&STOP ENABLING/DISABLING	P4	GRAPHIC DISPLAY
	CHRONO/SLEEP ENABLING/DISABLING		

17-DISPLAYS

DISPLAY AT FIRST PRODUCT IGNITION

The display shows an additional sequence to that described in the following paragraph only when the product is first powered up. This additional sequence makes it possible to adjust/confirm the current date and time (to make the adjustment later, see the dedicated user menu paragraph).

DISPLAY UPON SUBSEQUENT PRODUCT FEEDING

Each time the product is powered, the display shows the following sequence:

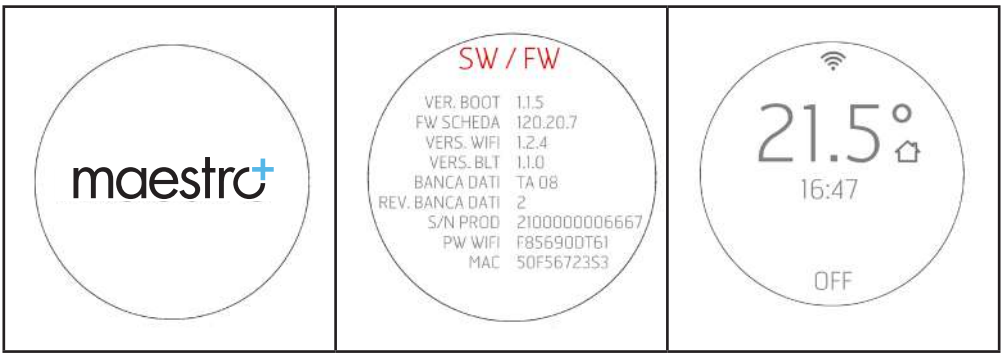

The Bluetooth sensor (if active) will search for the previously paired devices (see the Bluetooth chapter).

Technical Dept. - All rights reserved - Reproduction prohibited

17-DISPLAYS

Display with the product off

1. WI-FI active and connected, the icon is only present if the product is connected to a router or a network.
2. Bluetooth active and/or connected. The icon is present if the Bluetooth has been activated and turns blue if it is connected to a paired device.
3. Room temperature recorded by the local probe or remote control (OPTIONAL)
4. Current time
5. Active Chrono Programming
6. Icon that identifies the need for end-of-season maintenance (2000 h)
7. Pellet reserve light (OPTIONAL)
8. OFF/STANDBY in case of active START&STOP.

The keys are all lit because during this phase each key can allow you to activate functions or access dedicated menus
The ⏻ icon has a steady white light if the product is off and cold. For the other lighting states of the key, see the shutdown chapters.

After 2 minutes (standard time that can be changed from the menu), the displays goes into standby/energy saving mode (see chap. "DISPLAYS")

17-DISPLAYS

Display with the product on

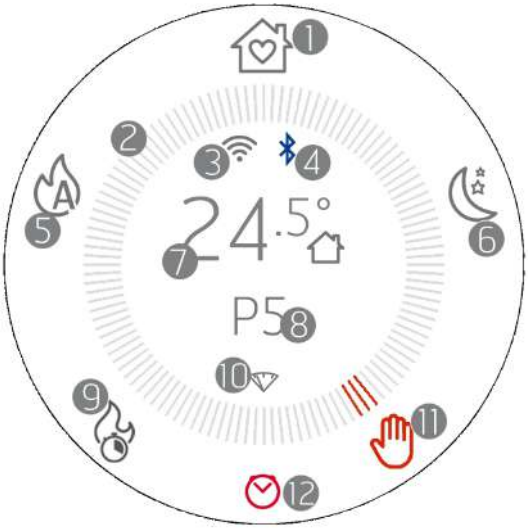

1. COMFORT mode
2. Operating mode crown
3. WI-FI active and connected
4. Bluetooth active and connected
5. AUTO mode
6. OVERNIGHT mode
7. Room temperature recorded by the local probe or remote control (OPTIONAL)
8. Flame power in MANUAL mode or room temperature set in AUTO/COMFORT/OVERNIGHT mode
9. TURBO mode
10. Pellet reserve light (OPTIONAL)
11. MANUAL mode (the active mode shown in this picture)
12. Chrono or Sleep active (see dedicated paragraph for the correct iconography for each function)

Technical Dept. - All rights reserved - Reproduction prohibited

18-OPERATING MODES

MAESTRO technology allows the heater to express its utmost potential with even an easier and more intuitive use. A real integrated micro-computer communicates with your smartphone and further improves the performance of the equipment that continues to work perfectly even in non-ideal conditions.

It has 5 preset settings making product management even easier, the consumption of the fuel is optimised and improves the comfort of use, as it can reach extremely quiet operation.

The available settings are:

COMFORT Ideal for all situations requiring maximum comfort. This mode allows an optimised consumption of the fuel to guarantee a good heating capacity and the best possible silent operation. Once this mode is activated, the user only has to choose the desired temperature and the appliance will independently manage the flame and ventilation power to ensure maximum comfort. In fact, in this mode it is not possible to change the power and ventilation, managed intelligently by the MAESTRO system.

AUTO if you prefer traditional automatic operation with the option of setting the temperature and ventilation.

OVERNIGHT Guarantees the maximum silence possible (noise reduced up to 4 times) allowing the maintenance of the room temperature. This mode is designed, in fact, for night-time operation or temperature conservation in an already pre-heated room ensuring the lowest possible acoustic impact. In Overnight mode consumption and ventilation are managed intelligently by the MAESTRO system and for this reason it is not possible to change its values.

MANUAL For those who prefer to use the product in the traditional manner without any temperature control. In this mode the user can freely choose the mix of flame power and ventilation regardless of consumption or silence.

TURBO Operation at maximum power and ventilation expressed by the product for a limited time (20 min) in order to allow rapid heating of a cold room. For the expected performance and consumption in this mode, this function can be reactivated only once every hour.

	Quiet operation *	Comfort**	Heating capacity	Reduced consumption
COMFORT	●●●●○	●●●●●	●●●○○	●●●●○
OVERNIGHT	●●●●●	●●●●●	●○○○○	●●●●●
TURBO	●○○○○	●●○○○	●●●●●	●○○○○
AUTO	●●●○○	●●●○○	●●●●○	●●●○○
MANUAL	●○○○○	●○○○○	●●●●○	●●○○○

* In operation, during start-up and shutdown
** Gradual heat emission, glass cleaning and combustion chamber cleaning

18-OPERATING MODES

DISPLAY STANDBY

The panel automatically goes into STAND-BY mode after a 2" time-out (the time can be changed from the panel menu).
The stand-by mode still indicates changes in the operating mode of the equipment (e.g.: pellet reserve, shutdown or cooling) and the room temperature changes with a 60 second interval.

DISPLAY WITH THE PRODUCT OFF When the display is in stand-by with the product off, the room temperature, the current time and the word OFF appear; the keys below turn off. Simply press any key to awaken the display from this state.	**DISPLAY WITH THE PRODUCT ON** When the display is in stand-by with the product on, the room temperature, the current time, the word ON and the equipment operating mode icon appear. Simply press any key to awaken the display from this state.

Technical Dept. - All rights reserved - Reproduction prohibited

18-OPERATING MODES

FEED SCREW ACTIVATION (FIRST IGNITION OR AFTER HOPPER EMPTYING)

Prior to first product ignition, it is necessary to load the fuel and preload the pellets inside the feed screw for loading the fuel in the brazier.

To do this, simply press and hold the ⊕ key for 10 seconds and the "feed screw loading" will activate.
The ⏻ button turns red until the phase ends or is interrupted.

To activate this function, the product must be OFF and COLD (the ⏻ key must be white and NOT flashing).

The display shows the feed screw icon and the countdown starting from the maximum number of seconds provided for the preload cycle (e.g. 120 seconds).

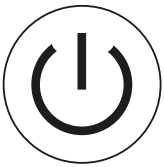

RED ICON

⚠ **The moment you start to see the pellet drop into the brazier, you must stop loading by pressing the ⏻ key.**

⚠ ***Ignition must start with an empty brazier and not with a preload.***

18-OPERATING MODES

IGNITION

Display upon ignition

- Press and hold the ⏻ key for at least 2", the product switches to on and the ⏻ key flashes until the ignition phase has been completed. On the other hand, it remains steadily lit and white during operation.
- The operating mode crown appears on the display, and the active mode icon remains lit red. The product turns on in the same operating mode in which it previously turned off
- The buttons light up according to the active operating mode and if they are off, it means that the function is not available.
- The temperature detected in the room and/or the power appears in the centre of the crown
- The icon is only present if the product is connected to a router otherwise it is off
- The icon is present if the Bluetooth has been activated.

Technical Dept. - All rights reserved - Reproduction prohibited

19-SELECTING THE OPERATING MODES

SELECTING THE OPERATING MODES

Navigation in the different operating modes takes place using the key. Every time the key is pressed, the next icon on the mode crown lights up in clockwise direction. The icon and the dashes turn red, showing the change of mode.
The change of mode takes place after 3" from the selection.
The selected icon (e.g.:) quickly flashes red/grey three times, simulating a pulsation. The dashes remain steadily red.

20-MANUAL MODE

MANUAL MODE

In manual mode it is possible to set the power of the flame from 1 to 5 at your discretion to adjust the amount of heat. In this mode there is no temperature control and the equipment works constantly at the set power(s)

Press the key to select the icon
The icon and the three adjacent dashes light up red.
All buttons are lit
The room temperature and the current power appear at the centre of the display and the crown.

The icon is only present if the product is connected to a router; otherwise it is off and the icon is present if Bluetooth has been enabled.

The keys allow you to modify the flame power and if you press them, all the texts at the centre of the display disappear and only the current setting appears.
The first press only enters the edit mode and shows the screen illustrated to the side; pressing the keys again will change the value. The display lasts 3" and in case of no further inputs, it returns to the image with the crown and updated power.

ATTENTION!
The chosen ventilation affects the maximum power that can be set in MANUAL mode to prevent the structure from overheating. For example, it is not possible to set the flame power to maximum (P5) and the ventilation to minimum or even off

If the ventilation values do not allow you to set the intended power, the power adjustment will follow the logic described below:

- However, the power chosen by the user is shown
- The unsuitable power flashes
- The maximum power that can be set appears in red
- You return to HOME with the maximum settable power selected.

Power chosen by the user	When the chosen power is too high for the set ventilation, the latter flashes.	The maximum selectable power is shown in red	Return to home with the maximum settable power selected.

Technical Dept. - All rights reserved - Reproduction prohibited

21-AUTO MODE

AUTO MODE

In AUTO mode, you can set the intended temperature in the room and the equipment runs at maximum power until the chosen temperature is reached. Once the temperature is reached, the equipment reduces its power to a minimum to hold the temperature.
If even the minimum operating speed causes a further increase in the room temperature, it is advisable to consider the combined operation with the START&STOP function (see the specific chapter)

Press the key to select the icon

The icon and the three adjacent dashes light up red.
All the buttons below the display remain lit.
The room temperature and the set temperature that is to be reached appear at the centre of the display and of the crown.

The icon is only present if the product is connected to a router; otherwise it is off and the icon is present if Bluetooth has been enabled.

The keys allow you to modify the temperature and if you press them, all the texts at the centre of the display disappear and only the current setting appears.
The first press only enters the temperature edit mode, whereas pressing the keys again will change the value.
Once the change is made, the selected temperature appears for 3" and if no further inputs are made, it is confirmed and the display returns to the previous image with the desired and updated temperature.

Pressing the keys continuously rapidly adjusts the increasing or decreasing degrees in 0.5°C steps for the first 5°C and 1°C steps for the remaining.

ATTENTION!
The chosen ventilation affects the maximum power even in AUTOMATIC mode to prevent the structure from overheating. If a low ventilation value is chosen, the product will readjust the maximum power threshold to prevent overheating. To have fully automated temperature and ventilation management, it is advisable to also set the fans in AUTO mode so that they too change their speed according to the heat demand.

22-COMFORT MODE

COMFORT MODE

In COMFORT mode, you can set the intended temperature in the room and the equipment runs at medium power until the chosen temperature is reached. Once the temperature is reached, the equipment reduces its power to a minimum to hold the temperature.
If even the minimum operating speed causes a further increase in the room temperature, it is advisable to consider the combined operation with the START&STOP function (see the specific chapter)

Press the key to select the icon.

The icon and the three adjacent dashes light up red.
All the buttons are lit except the fan button **as ventilation cannot be changed in this mode.**
The room temperature and the set temperature that is to be reached appear at the centre of the display and of the crown.

The icon is only present if the product is connected to a router; otherwise it is off and the icon is present if Bluetooth has been enabled.

The keys allow you to modify the temperature and if you press them, all the texts at the centre of the display disappear and only the current setting appears.
The first press only enters the temperature edit mode, whereas pressing the keys again will change the value.
Once the change is made, the selected temperature appears for 3" and if no further inputs are made, it is confirmed and the display returns to the previous image with the desired and updated temperature.

Pressing the keys continuously rapidly adjusts the increasing or decreasing degrees in 0.5°C steps for the first 5°C and 1°C steps for the remaining.

In this mode, the equipment works in such a way as to ensure the maximum possible heat with the minimum noise.

Technical Dept. - All rights reserved - Reproduction prohibited

23-OVERNIGHT MODE

OVERNIGHT MODE

In OVERNIGHT mode, you can set the intended temperature in the room and the equipment runs at low power until the chosen temperature is reached. Once the temperature is reached, the equipment reduces its power to a minimum to hold the temperature.
If even the minimum operating speed causes a further increase in the room temperature, it is advisable to consider the combined operation with the START&STOP function (see the specific chapter)

Press the key to select the icon.

The icon and the three adjacent dashes light up red.
All the buttons are lit except the fan button **as ventilation cannot be changed in this mode.**
The room temperature and the set temperature that is to be reached appear at the centre of the display and of the crown.

The icon is only present if the product is connected to a router; otherwise it is off and the icon is present if Bluetooth has been enabled.

The keys allow you to modify the temperature and if you press them, all the texts at the centre of the display disappear and only the current setting appears.
The first press only enters the temperature edit mode, whereas pressing the keys again will change the value.
Once the change is made, the selected temperature appears for 3" and if no further inputs are made, it is confirmed and the display returns to the previous image with the desired and updated temperature.

Pressing the keys continuously rapidly adjusts the increasing or decreasing degrees in 0.5°C steps for the first 5°C and 1°C steps for the remaining.

In this mode, the equipment works in such a way as to ensure the minimum possible noise, combining a decent heating capacity to keep the rooms warm, e.g. at night or in very isolated rooms/homes.

24-TURBO MODE

TURBO MODE

In TURBO mode, the equipment works for the limited time of 20 minutes at its maximum power and ventilation without the possibility of changing its setting.

Press the key to select the icon.

The icon and the three adjacent dashes light up in red and a confirmation request appears when selecting the mode. If you confirm by selecting "ON", the mode is activated and only the TURBO indication appears at the centre of the crown. Vice versa, if you select OFF or if you press the button, you continue navigating in the direction of the next mode (in this case AUTO).

If activated, all the buttons remain off except and .
In this mode it is not possible to make any adjustment because the equipment emits the maximum of its calorific power. Every variation requires exiting the mode itself.

The icon is only present if the product is connected to a router; otherwise it is off and the icon is present if Bluetooth has been enabled.
The TURBO function has a limited duration of 20 minutes.

Pressing the key allows you to change the mode but only after a double confirmation (see screen at the side) to prevent an accidental exit. Being a mode that brings the product to maximum speed, it can only be activated once every hour and accidental exit precludes the possibility of re-entering the mode for the next 60 minutes.

If, on the other hand, you decide to enter TURBO mode anyway before the 60 minutes expire, a countdown is shown until the mode can be activated. If you decide to remain in this state even though the 60 minutes have not expired, the TURBO mode will start working as soon as the countdown reaches 00:00. Until then the product will work in the last mode.
At the end of the 20 minutes of TURBO mode, the product will return to the last mode it was in.

If you are "waiting" to enter TURBO mode, double confirmation is not required to change the mode.

Technical Dept. - All rights reserved - Reproduction prohibited

25 - FANS

FAN BASE ADJUSTMENT

You can use the key to adjust the equipment fan/s.
The first time you press it allows you to enter the edit screen of the first fan.
The ⊕ ⊖ keys change the fan speed.
Pressing the key repeatedly allows you to choose which fan to modify, from a minimum of 1 to 4 fans, according to the composition/construction of the product.

Once the key has been pressed, it is possible to adjust the power for 4" and if there are no further inputs, it returns to the initial image with the updated ventilation value or unchanged if there has not been any modification.

EXAMPLE:

1 press of the key (tangential fan)	2 presses of the key (if 1 C. AIR fan is present)	3 presses of the key (if 2 C. AIR fans are present)

25 - FANS

The available values start from NO AIR (fan off)/LOW AIR (fan at minimum possible operating speed) up to power 5 (MAXIMUM).
The AUTO mode is added to these choices, which allows self-adjustment of the fan based on the flame power. This mode is very practical and recommended because this way, the product always generates its maximum heat with minimal noise thanks to parameters that are tested by the manufacturer.

ATTENTION!
Some products can completely shut down the ventilation of one or more fans thanks to their conformation and ability to exchange heat. In this case, the NO AIR option will be indicated if you decide to select the minimum ventilation power. Conversely, some products cannot turn off the fans completely but the minimum power corresponds to a very slow rotation to facilitate convective motion. In this second case we are referring to LOW AIR.

If one or two fans are set to minimum, the fan icon changes to and NO AIR or LOW AIR is indicated according to the product characteristics and whether the ventilation can be switched off or not as indicated above and in the catalogue.		

ATTENTION!
If you have a product with more than 1 fan, it is not possible to turn off all the fans manually with the key, but if you want to make this adjustment, you can enable the SILENT MODE, described below.

Technical Dept. - All rights reserved - Reproduction prohibited

26-SILENT MODE

ENABLING THE SILENT MODE

There is an advanced feature to be able to set the product to maximum silence by following an automatic procedure that first allows all the residual heat to be evacuated and then set all the fans to minimum power.

Press and hold the key for 5".

The centre of the crown indicates the activation of the SILENT MODE and the icon

None of the modes are active as this is an additional mode which has the exclusive purpose of setting all the fans to minimum power.
The buttons turn off as no power or temperature adjustment is possible

After activating the mode, the product needs 10 minutes to be able to definitively enable this feature. During these 10 minutes the product gradually goes to minimum power to evacuate all the residual heat (imagine that you can enable the SILENT MODE even when it was in P5, for example) and then sets all the fans to NO AIR or LOW AIR.

To exit SILENT mode, press the button to return to the mode it was in before the SILENT MODE was activated.

27-START&STOP

START&STOP

The START&STOP function **switches off** the product when it reaches the required room temperature and if the set temperature hysteresis is also respected.

Pressing the button activates the START&STOP function directly and the small house near the temperature turns into the icon to indicate its activation.
Deactivate by simply pressing the button again and the house icon returns to how it was previously.

For additional evidence of activation, ECO ON/OFF appears on the display for 3" and then returns to the previous display.

When the room temperature reaches the set temperature and all the other parameters are also respected (see the next paragraph), the equipment switches off and the display indicates the room temperature, the current time and the STANDBY indication to indicate the standby mode, which allows the product to turn on again as soon as the temperature drops below the set threshold or if the intended temperature in the room increases.

The START&STOP is recommended for well insulated environments where even the minimum power causes an increase in temperature.

On the other hand, it is not recommended where the product is forced to switch on and off frequently (for example after at least 1 hour of operation) because in this way, besides premature wear of the glow plug, the product never manages to reach full efficiency and temperature, thereby causing greater accumulation of ash or even condensation.

Technical Dept. - All rights reserved - Reproduction prohibited

27-START&STOP

INTERVENTION DELAY AND ADJUSTMENTS OF THE START&STOP TEMPERATURE HYSTERESIS

When the room temperature is reached, there is a waiting time for intervention to prevent the equipment from suddenly turning on/off as the room temperature drops/rises, for example, when a door or an external window is opened. This waiting time therefore allows you to be sure that the room temperature has actually dropped for a certain time inside the room (for example 5 minutes).

There also is a temperature threshold beyond which the equipment reacts to in the event of switching on and off and this is called hysteresis. NEGATIVE hysteresis identifies the temperature delta, beyond which the equipment must turn on again; whereas POSITIVE hysteresis identifies the temperature delta beyond which the equipment must turn off.

Example1: With the product switched on, POSITIVE hysteresis is 2°C. The room temperature is 21°C and the set temperature is 22°C. The product will remain on until the room temperature is exceeded by 2°C and therefore, when T>23.0°C

Example2: With the product off, NEGATIVE hysteresis is 2°C. The room temperature is 19°C and the set temperature is 20°C. The product will remain off until the set temperature drops 2°C and therefore, when T<18.0°C

FORCED RESTART FROM START&STOP WITH BUTTON OR TEMPERATURE

As previously mentioned, when a shutdown occurs via START&STOP, the display indicates the off condition with the icon, the key remains green and the word STAND BY is displayed.
The button remains steady green and the keys also remain lit.

GREEN ICON

In this display condition, the product can be turned back on as follows:

1. Wait for the room temperature to drop below the intended temperature so that the restart occurs via START&STOP

2. Deactivate the START&STOP with the relative button and proceed with a new start-up.

3. Change the intended temperature by pressing the keys.
In this case, the temperature modification screen appears. The equipment will turn on when the setting is higher than the room temperature + the POSITIVE hysteresis.
On the other hand, it remains in STAND BY if the setting is lower than the room temperature + POSITIVE hysteresis and it is not possible to switch on the device, even with the text .

27-START&STOP

ACTIVATING START&STOP WITH THE EQUIPMENT OFF

If the equipment is OFF the START&STOP needs to be activated, the following occurs when the key is pressed:

- The display changes from OFF to STAND BY,
- the house icon becomes and the key turns steady green
- In any case, the product remains off, however:
    - o If the previously set temperature is already lower than the room temperature, the product remains off and the on/off key turns steady green. The stove will eventually turn on again when the room temperature drops or by modifying the temperature setting, as seen previously, with the keys.
      Under no circumstances can the product be switched on again when TSET<ROOM T.
    - o If the previously set temperature is already higher than the room temperature, the equipment remains off but the green key will start to flash to alert the user that an additional input is required to allow the product to switch on (on/off key pressed for 2").

ECOSTOP IN CASE OF MANUAL MODE

If the user changes the mode and switches from AUTO/COMFORT/OVERNIGHT to MANUAL, the START&STOP remains active and is indicated by the green icon next to the room temperature, for it to possibly be used again.
It can only be deactivated with the specific key.
If the user decides to turn off the product manually, the START&STOP remains active and is indicated by the icon, but the shutdown status will not be STANDBY as AUTO/COMFORT/OVERNIGHT/MANUAL but OFF because the product was last switched off in MANUAL mode. In this condition it is not possible to access the temperature modification from the turned off display and therefore it is not possible to restart from the OFF state even though the START&STOP is active. Switch it back on by pressing the key for 2".

Technical Dept. - All rights reserved - Reproduction prohibited

28-CHRONO-SLEEP

CHRONO AND SLEEP OPERATION

Press the key to directly activate the CHRONO or SLEEP function.

The first time the button is pressed, the following appears: **CHRONO OFF**

Use the keys to select **CHRONO ON**

If the Chrono has been activated, the red icon appears on the display so that activation of the function is always evident.

Press the key to disable the CHRONO and access the **CHRONO ON screen.**

Use the keys to select **CHRONO OFF**.

The second time the button is pressed the following appears: **SLEEP OFF**

Unlike CHRONO, the SLEEP mode sets an **unplanned** switch-off of the product outside the CHRONO programming

Use the keys to select the time after which you want the product to switch off. You can choose a time between 10 minutes and 8 hours, with 10 minute intervals.

28-CHRONO-SLEEP

The red icon appears on the display so that the activation of the function is always indicated.

Press the key twice to deactivate SLEEP and turn on the screen with SLEEP and the remaining time indicated.
Use the keys to bring the count to 00:00, which corresponds to **SLEEP OFF** (timer at 00:10+, pressing the key once switches to OFF and not to 00:00).

COMBINED CHRONO AND SLEEP ACTIVATION

If the CHRONO and SLEEP modes are both ON, the icon shown is a mix between the two:

Technical Dept. - All rights reserved - Reproduction prohibited

28-CHRONO-SLEEP

ACCESS TO CHRONO PROGRAMMING

To access the chrono programming mode from the panel, press and hold the key for **5 seconds**.

The screen on the side appears, where it is possible to set:

- o The chrono programs for the days of the week
- o Temperatures T1 / T2 / T3 / T4

Use the keys to select the menu item and the OK key to enter the daily programming.
Press the ESC key to return to the previous menu.

The menus are all in English and the language cannot be changed due to how the items are displayed.

CHRONO PROGRAMMING

Select SET CHRONO (see image above) to enter the mode for choosing the day to be programmed.
Use the keys to select a menu item and use the SET key to select the item by entering the programming.

Press the OK key to return to the previous menu, confirming the current weekly programming.
The selectable items are:

- MONDAY
- TUESDAY
- WEDNESDAY
- THURSDAY
- FRIDAY
- SATURDAY
- SUNDAY
- COPY PROG. (copy program)
- MODIFY PROG. (modify program)
- DELETE PROG. (delete program)

Select a day (MONDAY) to access the programming of that day, and a summary of the programming already scheduled for that day is shown. The crown has 48 sectors corresponding to the 24 hours plus the half hours; it is coloured differently according to the temperature programming and whether the chrono is active or not.
In the centre of the crown there is a small key that summarises the colours for the temperatures that can be set in the dedicated menu (see dedicated chapter)

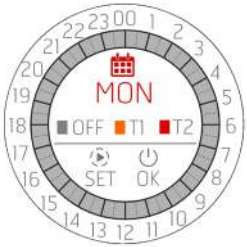

Use the SET key to enter the programming of a **NEW TIME SLOT** for MONDAY as indicated at the centre of the crown.
If, instead, you wish to confirm the programming as shown and return to the day selection menus (not completely but only by one step), press the OK key.
To edit or delete the existing slots, return to the main menu and select MODIFY PROG. (MODIFY THE CHRONO PROGRAM).
An example of a crown without a program with all sectors in OFF is shown on the side.

28-CHRONO-SLEEP

TIME SLOT PROGRAMMING

At the start of programming, the first **START** field is coloured red. Use the ⊕ ⊖ keys to adjust the START time of the chrono slot.

Advances are in 30 MINUTE STEPS (00:00 / 00:30 / 01:00…).

Use the SET key to confirm the selected time and move on to the next **END** setting which in turn lights up in red. The END adjustment is carried out with ⊕ ⊖ and confirmed with . Then move on to adjusting the desired temperature by setting in this case T1 or T2 or T3 or T4 (T3 and T4 for HYDRO STOVES). The temperature corresponding to T1 or T2 is displayed next to T1 or T2. If instead you wish the stove to be off, select OFF.

T1 or T2 or T3 and T4 cannot be edited on this screen but only from the main screen through SET TEMP.

Continuing with the programming, the mode chosen for that time slot and then ventilation are set. Please note that ventilation can only be selected when programming the AUTO mode. If the COMFORT or OVERNIGHT mode is selected at the ventilation field , dashes - - - will be shown and no modification can be performed.
After adjusting ventilation (only to AUTO) or the mode, you can cyclically continue editing by repeatedly pressing the SET key.
To confirm all the programming and exit the screen, press the OK key, a window will appear asking whether to confirm the time slot (CONFIRM) or to exit without saving (EXIT).
After exiting the screen, you return to the summary screen of the day you are editing (MONDAY) for potential programming of another time slot.
If you wish to confirm all the programming of the day you are programming, press OK again and you will return to the menu for selecting the days of the week (MONDAY, TUESDAY, etc.)

Technical Dept. - All rights reserved - Reproduction prohibited

28-CHRONO-SLEEP

- *When setting a new time slot, this can never be spaced out by just 30 minutes, but at least 1 hour is required to give the product time to carry out the entire shutdown cycle. By programming a new time slot, there will therefore be no option to select a time only half an hour after the last shutdown.*
- *It is instead possible to program two specific time slots (as in the graphic representation) as in this case the stove will not switch off but it may be that you only wish to change the temperature SET (from T1 to T2 or vice versa) or the operation (from AUTO to COMFORT for example).*
- *If you set a new time slot that "invades" an existing one, it is assumed that the user wishes to change both, therefore the new time slot will partially or completely overwrite the existing one.*
-

  Example:
  EXISTING TIME SLOT:
  from 06:00 to 12:00 T1 and AUTO and V3

  NEW TIME SLOT BEING ENTERED:
  from 04:00 to 09:00 T2 and COMFORT

  RESULTING PROGRAMMING:
  from 04:00 to 09:00 T2 and COMFORT
  from 09:00 to 12:00 T1 and AUTO (V3)

- *If you only wish to delete or modify an existing slot, use the dedicated menu described below*
- *A time slot can never exceed midnight and therefore if you wish continuous night operation, select the END time 00:00 and on the following day set a time slot with a START at 00:00.*

PROGRAMMING OF A TIME SLOT IN CASE OF AN EXTERNAL THERMOSTAT

If there is an external thermostat active, obviously there is no option to choose a T1 / T2 / T3 / T4 but it is possible to select only ON/OFF.

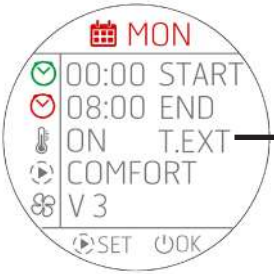

The main programming screen changes as shown on the side:

The temperature field displays ON and T.EXT which identifies that on that specific time slot the thermostat requests power.

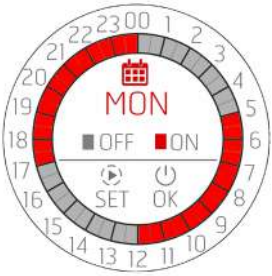

The day summary screen changes as follows:

PROGRAMMING OF THE WHOLE WEEK OR COPY OF THE PROGRAMS

As explained, it is possible to program each individual day of the week but also to copy an **entire daily program to another day**. To do this, select COPY PROG. from the menu.

From this menu select the day you wish to copy and press the SET key. The selected day turns red and after 1" you access the next menu which asks to which days to make the copy.
Use the key to instead return to the previous menu, actually confirming the state of the art.

Continuing with the example, if you decide to copy the day MONDAY, the abbreviation of the day you are copying will be indicated in red at the top and under the list of the other days except the one from which you are copying (MONDAY)
You can select one or more days in which to copy the MONDAY program.
Scroll through the list with the keys and use the SET key to select the days in which you wish to make the copy. Pressing the key again selects and de-selects the days.

Technical Dept. - All rights reserved - Reproduction prohibited

When all the days in which to copy the MONDAY program have been chosen, confirm the operation with the ⏻ OK key.

To highlight the operation performed, the screen on the left appears for 3" and you will return to the original screen if you wish to make other copies.

EDITING A DAILY PROGRAM

To edit a daily program, select **MODIFY PROG.** in the home menu.
The screen used to select the days of the week appears.

ATTENTION! The screen icon is the edit one and not the one for programming a new slot!!.

Use the SET key to select the day and move to the screen relating to the existing time slots. If no day is selected, pressing the ⏻ OK key basically returns to the previous menu without making any changes.

If instead you access the modification of the time slots as usual with the ⊕ ⊖ keys, you select the program and use the SET key to select the one you wish to modify.
If instead no slot is selected, use the ⏻ OK key to basically return to the previous menu without making any changes.

If you wish to modify a time slot, the first request is whether you wish to DELETE or MODIFY the time slot through this menu:

If you wish to delete the time slot, you will access this double confirmation screen and if so, the time slot is deleted and you return to the previous menu where all the time slots of the day MONDAY are shown, obviously without the one just deleted.

28-CHRONO-SLEEP

MODIFYING THE TEMPERATURES T1 / T2 / T3 / T4

To set the temperatures of SET T1 – T2 – T3 – T4 (T3 and T4 only for Hydro stoves) you must enter the menu **SET TEMP**. selecting the item with the ⊕ ⊖ keys and confirming with the ⏻ OK key.

Press the ESC key ▶ instead to return to HOME

By accessing the temperature modification menu, the following settings can be viewed.

By pressing the ▶ SET key, the first temperature (T1) becomes RED and the ⊕ ⊖ keys can be used to proceed with the modification in steps of 0.5°C. As usual, a prolonged pressure of the ⊕ ⊖ keys results in temperature variations in higher steps, following the same philosophy of the temperature changes on the panel.

Pressing the ▶ SET key again proceeds with the modification of the second temperature (T2) which in turn becomes RED. This process continues for all temperatures or until the ▶ SET key is pressed.

To confirm and exit the screen, press the ⏻ OK key.

PLEASE NOTE In case of an AIR stove, temperatures T3 and T4 either do not appear or they remain unchangeable.

Technical Dept. - All rights reserved - Reproduction prohibited

28-CHRONO-SLEEP

CHRONO VARIANT FOR HYDRO STOVES

MANAGEMENT OF T3 AND T4

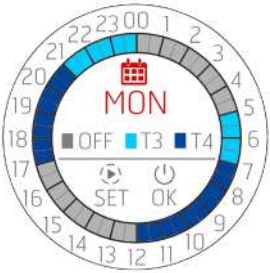

If T3 and T4 temperatures are selected, the summary display simply changes colour and the key is updated since it is not possible to set the chrono slot where both the AIR temperatures (T1 and T2) and the WATER temperatures (T3 and T4) are present simultaneously
When temperatures T3 and T4 are selected in the programming, the representation of the day will take the colours of T3 and T4

PROGRAMMABLE PARAMETERS IN THE TIME SLOT

With respect to AIR products, there are fewer possible settings which are only START, END and the water temperature in the puffer/boiler.
As there is no option to set modes and ventilation, these parameters disappear.

29 - WI-FI/WPS/BLUETOOTH

ENABLING/DISABLING BLUETOOTH

BLUETOOTH is independent from the WI-FI and is enabled by pressing ⊕ ⊖ simultaneously and continuously for 5 seconds

Pairing is enabled during activation and when you return to the home screen, the icon appears and flashes waiting for connection with an **already registered device.**

The Bluetooth connection is not deactivated but is always waiting for a connection (with devices that are already registered), so that if a paired device is within range at different times of the day, it automatically connects to the product (just like a mobile phone when entering the car).

Press ⊕ ⊖ for 5" to disable Bluetooth.
If WIFI has already been enabled, both function simultaneously, otherwise only Bluetooth will be active.

BLUETOOTH AND WI-FI DISPLAY

Bluetooth only is ON and waiting for a connection with devices that are already registered	Bluetooth only is ON and connected (blue icon)
WI FI is ON and connected and Bluetooth is waiting for a connection with devices that are already registered	WI FI is ON and connected and Bluetooth is connected (blue icon)

FIRST BLUETOOTH CONNECTION

As is the norm for Bluetooth connections, search for the Bluetooth network of the equipment on the device (smartphone), indicated on the product label.

Technical Dept. - All rights reserved - Reproduction prohibited

29 - WI-FI/WPS/BLUETOOTH

ENABLING/DISABLING WI-FI and WPS

By default, the product has Bluetooth network enabled and Wi-Fi active but not connected: this means that Wi-Fi is not visible until the product is connected to a Wi-Fi/home network.

WI-FI MENU:

Open the specific menu on the panel by simultaneously pressing the ⊕ ⊖ keys.

Depending on the connection status, you can select:

- "OFF": when Wi-Fi is connected to a home network that has already been set up and can be switched off by interrupting the product's connection to the network.
- "ON": when Wi-Fi has already been switched off and switches back on trying to connect to the previous network used for the connection. It is only visible and selectable if it is not connected to a network.
- "WPS": when Wi-Fi has never been connected to any network or it has been reset, then the procedure can be activated to connect the product.
- "RESET": regardless of the Wi-Fi status, this disconnects the product from the network and/or deletes the saved network if present.

When the intended option is selected on the menu, the chosen option appears in full screen for 3" and then returns to the display prior to the ⊕ ⊖ keys being pressed.

The selection menu has a timeout of 60". If no selection or confirmation is made with the ON/OFF key, everything remains unchanged as at the moment prior to pressing ⊕ ⊖ .

When Wi-Fi is active and connected to a router or similar, the symbol remains indicated inside the crown.

The symbol also indicates the strength of the Wi-Fi signal by removing or adding lines to the symbol to indicate a change in signal strength, according to this diagram:

	LOW POWER		MEDIUM POWER		MAXIMUM POWER		APP CONNECTED TO THE NETWORK BUT NOT TO THE STOVE

There are two ways to connect the product to the Wi-Fi network:

- WPS function
- With the APP (Android or IOS) via Bluetooth connection

WPS CONNECTION

Open the specific menu on the control panel by simultaneously pressing the ⊕ ⊖ keys and select "WPS" (the menu can be opened with the product on or off).

When WPS is activated, the icon turns red and always flashes for the expected connection duration (2 minutes).

If the procedure is successful, the symbol remains steady, otherwise after the WPS timeout, the symbol disappears.

CONNECTION BY APP (ANDROID OR IOS) VIA BLUETOOTH CONNECTION

To connect to a home network, first ensure that the Bluetooth connection is on.

When the APP starts up the first Bluetooth connection screen appears, press the "+" box to add a new device.

29 - WI-FI/WPS/BLUETOOTH

The APP will search for available devices close by. It is possible that not only the Bluetooth network of the stove is found, but also that of other appliances; the stove is uniquely identified by the name MCZ_EP_123456, where the last 6 numbers are the last 6 digits of the stove's serial number which can be found on the appliance's label or in the instruction leaflet.

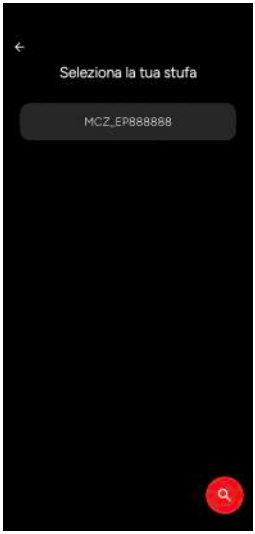

When the product is connected via BLUETOOTH, the APP will display a list of available home networks whose login details must be entered.

Once the network has been selected, the data of the stove being connected are given. Pressing the NEXT key starts the network connection procedure which identifies all the steps that have been successful or have failed.
If the whole procedure is correct, press the NEXT key to start interacting remotely with the appliance via Wi-Fi.

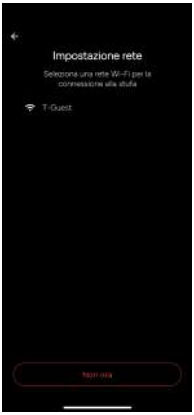

Technical Dept. - All rights reserved - Reproduction prohibited

30-SHUTDOWN

SHUTDOWN (in various states)
Just like switch-on, press and hold ⏻ for 2" and the display will switch to OFF/stand-by mode.

OFF display.

- Room temperature
- Current time
- OFF
- The icon is only present if the product is connected to a router; otherwise it is off and the icon is present if Bluetooth has been enabled.
- The only lit key is ⏻
- In the shutdown state, the ⏻ key changes colour according to the shutdown stage:
  - FLASHING Red: First shutdown stage.
  - FLASHING blue: Cooling stage and the icon appears on the display and the ⏻ button flashes blue. If the equipment has a automatic brazier, the brazier cleaning icon appears during the cooling stage
  - STEADY white: Cold product in stand by and OFF appears on the display
  - STEADY green: Product OFF from START&STOP and waiting for input.

RED ICON	BLUE ICON	BLUE ICON	WHITE ICON
SHUTDOWN	BRAZIER SCRAPING (MATIC STOVES)	COOLING	OFF

GREEN ICON	RED ICON
OFF BY ECOSTOP	OFF BY ALARM

31-EXTRA DISPLAYS

FEED SCREW AUTOMATIC RELEASE

If the ON-OFF key turns yellow during operation, it means that the feed screw is performing a rotation cycle in the reverse direction to release some pellets in it.
The cycle is automatic and there is no need for user intervention.

YELLOW ICON

FORCED COOLING

A compulsory 30-minute cooling cycle takes place when the product works continuously for many hours (e.g. 6 hours) at maximum power (not recommended based on the warnings in Chapter 1 of "PART 1" of the manual). When this happens, the display shows that shown on the side.

During this period the product still guarantees moderate heating efficiency (equal to power 3) but it is not possible to intervene in any way to disable it, except by switching the product off by pressing the ⏻ key for 2" as usual

STAND BY DISPLAY

Technical Dept. - All rights reserved - Reproduction prohibited

31-EXTRA DISPLAYS

MANAGING OTHER NOTIFICATION ICONS

The following are other notification icons that must appear on the panel:

 The pellet reserve icon appears if the specific sensor (optional) is installed. The symbol appears inside the crown when the pellet level drops below the sensor: grey during operation and red in OFF or STAND BY for START&STOP The icon does not appear during shutdown and cooling If the panel is in STANDBY, the reserve icon is displayed alternately with the icon that indicates the operating mode (or SILENT MODE) with an interval of 10 seconds each.	
The red icon indicates that the maximum number of working hours has elapsed, beyond which unscheduled maintenance is required (e.g. 2000 working hours). It appears in the STAND-BY and OFF screen (PRODUCT OFF or OFF FOR START&STOP) The icon does not appear during shutdown and cooling	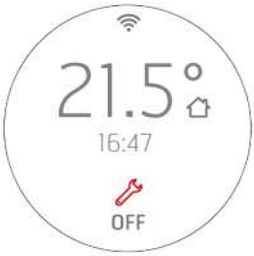
Automatic brazier cleaning The icon appears after the shutdown and before the cooling stage in the case of products equipped with a automatic brazier. The icon appears throughout the brazier handling cycle.	

31-EXTRA DISPLAYS

COOLING ICON Display in COOLING status after shutdown.	
FORCED COOLING ICON FORCED COOLING STAND BY display. Exceeding the maximum hours of operation at maximum power (e.g.: 6 hours).	
CHRONO and SLEEP Example of the CHRONO/SLEEP icon display when OFF and of the CHRONO with STAND BY display and product ON. The icons are red.	
SILENT MODE SILENT MODE STAND BY display	
Example of displaying several icons in OFF or STAND BY for START&STOP. In this case, the icons are all red	

Technical Dept. - All rights reserved - Reproduction prohibited

32-USER MENU

USER MENU

Pressing the button continuously for 5" grants access to a user menu scrolled with the buttons.
The exit TIME OUT from this screen is 2 minutes, unless you forcibly exit with .
The selection box indicates the item you are selecting and moves with .
Press to select the menu item
To exit and NOT confirm the choices .

The user menu has the following items:

- INFO = Display of the most important operating parameters
- DATE = Date and time setting
- ΔT START&STOP= POSITIVE and NEGATIVE hysteresis setting for START&STOP operation
- TONE:
    - SILENT: light BEEP only upon confirmation of commands
    - NORMAL: BEEP only audible upon confirmation of commands (FACTORY SETTING)
    - HIGH: BEEP audible every time the button is pressed
- ADAPTIVE MODE = ON/OFF (default OFF)
- BRIGHTNESS = option to adjust the display contrast
- DISPLAY SET = option to adjust the centring of the display
- STANDBY DISPLAY = It is used to adjust the time after which the display goes into Stand by (see the previous paragraph). Adjustment in seconds with a prolonged press of the keys in 5" steps (default is 120"). Limit is 600" (10 minutes). Pressing the key again after 600" brings the stand by to OFF, i.e. the standby screen never appears when ON
- CLEAN GRATE (only MATIC and HYDRO products)
- T. EXT: It is used to enable or deactivate an external thermostat.

32-USER MENU

CONTROLS

DISPLAY	CONTROLS
INFO 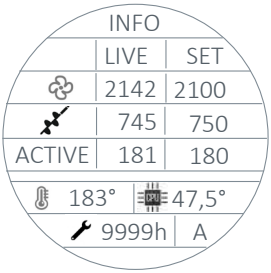	Read-only Key ⏻ or ▶ to exit (+beep) The TIME OUT of this screen is 2 minutes
DATE 	Once you have entered the menu, the day turns red to indicate where the adjustment of the values begins. The ⊕ ⊖ buttons and ▶ are lit, indicating which keys are enabled for adjustments whereas the others are disabled. Use the ⊕ ⊖ keys to choose the day and ▶ to confirm and move on to the month setting, which in turn turns red. Use the same method to then set the current year. Pressing the ▶ key again moves on to setting the time. The hours turn red. Adjust the hours with ⊕ ⊖ and confirm with ▶ and move on to set the minutes. The same procedure applies to set the minutes. When the ▶ key is pressed to confirm the minutes, all the characters become grey again; wait 3" to have a general view of the adjustments made and exit the menu and return to the display shown before accessing the menu. The date and time can both be adjusted with the product ON and OFF (or when first started up).
ΔT START&STOP (POSITIVE AND NEGATIVE HYSTERESIS) 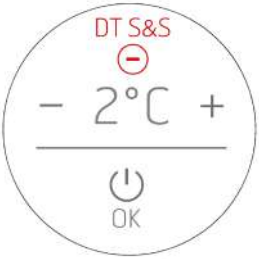 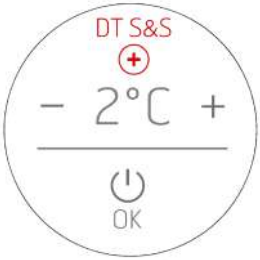	• ⊕ ⊖ to change the values • The available values from +5 to -5 • ⏻ to confirm and return to the previous page (+beep) • ▶ to exit without confirming (+beep)

Technical Dept. - All rights reserved - Reproduction prohibited

32-USER MENU

TONE 	• ⊕ ⊖ to change the values • Available values – SILENT / NORMAL / HIGH • ⏻ to confirm and return to the previous page (+beep) • ▶ to exit without confirming (+beep) NORMAL is the factory setting
ADAPTIVE MODE 	• ⊕ ⊖ to change the values • The available values -ON and OFF • ⏻ to confirm and return to the previous page (+beep) • ▶ to exit without confirming (+beep)
BRIGHTNESS 	• ⊕ ⊖ to change the values • The available values -3 -2 -1 0 + 1 +2 +3 • ⏻ to confirm and return to the previous page (+beep) • ▶ to exit without confirming (+beep)
DISPLAY SET 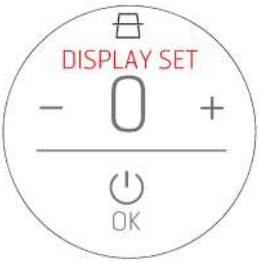 	• ⊕ ⊖ to change the values • The available values -3 -2 -1 0 + 1 +2 +3 • ⏻ to confirm and return to the previous page (+beep) • ▶ to exit without confirming (+beep)

32-USER MENU

STANDBY DISPLAY 	• ⊕ ⊖ to change the values • The available values from 0 to 600". The next step after 600" is OFF, which means that the display NEVER goes into standby. • ⏻ to confirm and return to the previous page (+beep) • ▶ to exit without confirming (+beep)
CLEAN GRATE (only MATIC and HYDRO) 	• ⊕ ⊖ to change the values • The available values -ON-OFF • ⏻ to confirm and return to the previous page (+beep) • ▶ to exit without confirming (+beep)
EXTERNAL THERMOSTAT 	• ⊕ ⊖ to change the values • The available values -ON-OFF • ⏻ to confirm and return to the previous page (+beep) • ▶ to exit without confirming (+beep)

Technical Dept. - All rights reserved - Reproduction prohibited

EXTERNAL THERMOSTAT

If an external thermostat is connected, it is no longer possible to indicate the room temperature recorded by the local probe and adjust the intended temperature from the panel.
The display will therefore be shown in AUTO/COMFORT/OVERNIGHT mode:

ON indicates that the thermostat contact is CLOSED and there is a power demand. Therefore the product will run at maximum power until the temperature is reached and then it will reduce its operation to minimum.	OFF indicates that the thermostat contact is OPEN and there is NO power demand. Therefore the stove will run at minimum until the temperature drops below the temperature set on the external thermostat.
ON indicates that the thermostat contact is CLOSED and there is a power demand and therefore the stove will run at maximum power until the temperature is reached and it will then turn off according to the START&STOP logics. In this case, since the temperature hysteresis cannot be managed (managed by the external thermostat), the reaction times for restarting or switching off from START&STOP are only linked to the INPUT/OUTPUT delays from the status (see Chap. START&STOP).	OFF indicates that the thermostat contact is OPEN and there is NO power demand and therefore the stove will run at minimum power until the START&STOP INPUT time is satisfied. In this case, since the temperature hysteresis cannot be managed (managed by the external thermostat), the reaction times for restarting or switching off from START&STOP are only linked to the INPUT/OUTPUT delays from the status (see Chap. START&STOP). START&STOP).

33-PELLET LEVEL SENSOR

PELLET LEVEL SENSOR (supplied)

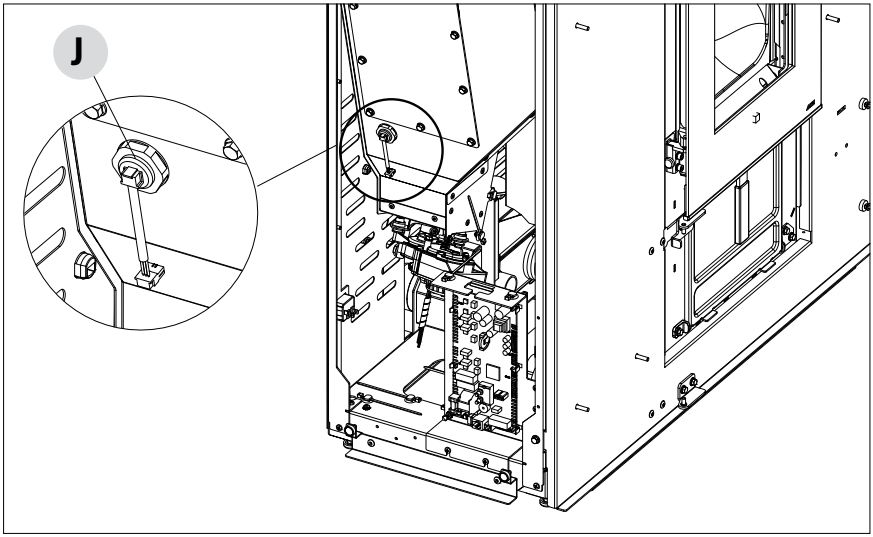

The pellet sensor "J" is a low fuel indicator that warns the user that the pellets are finishing.
The connection on the electronic board is in position 16.

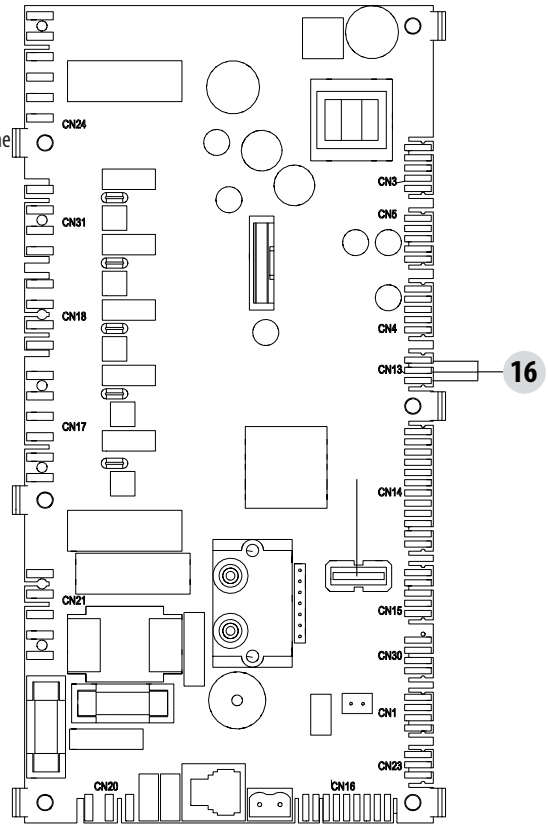

Technical Dept. - All rights reserved - Reproduction prohibited

34-EXTERNAL THERMOSTAT

EXTERNAL THERMOSTAT CONNECTION (OPTIONAL)

To connect the external thermostat, disconnect the room probe from the terminal in position 12 of the circuit board and connect the wiring of the external thermometer.

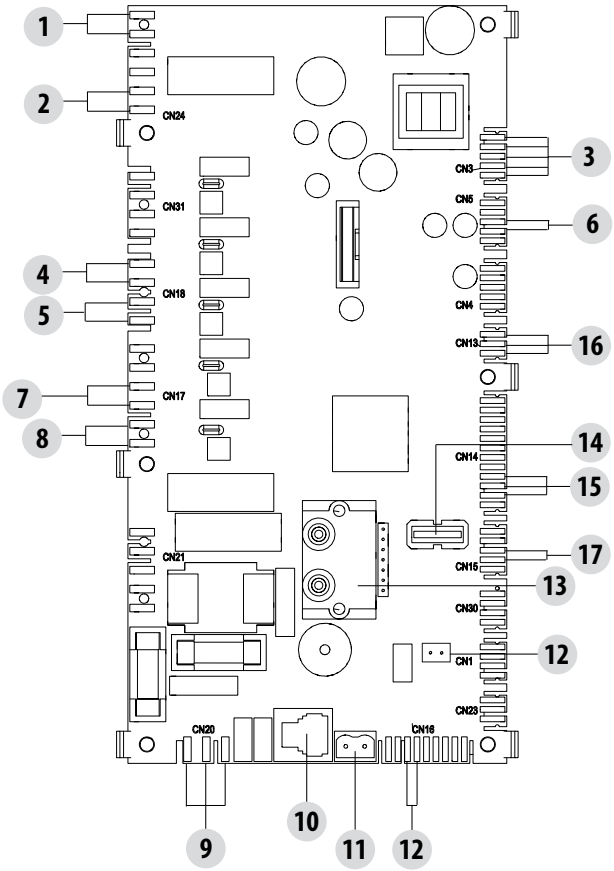

35-SAFETY DEVICES

SAFETY DEVICES
The product is fitted with the following safety devices.

SMOKE TEMPERATURE PROBE
This detects the temperature of the smoke, thereby enabling starting or stopping the product when the smoke temperature drops below the preset value.

PELLET HOPPER TEMPERATURE PROBE
If the temperature exceeds the preset safety value, it immediately stops the product, which must cool down before the stove is restarted.

ELECTRICAL SAFETY
The product is protected against power surges by a general fuse located in the power panel on the back. Other fuses that protect the circuit boards are located on the said boards.

SMOKE FAN BREAKAGE
If the fan stops, the circuit board promptly blocks the supply of pellets and the alarm is displayed.

GEAR MOTOR BREAKAGE
If the gear motor stops, the product switches off and the relative alarm is displayed.

TEMPORARY POWER CUT
If a power cut occurs during operation, the product automatically sets itself in cooling mode when the power is restored and then it restarts.

FAILED IGNITION
If no flame lights during start-up, the product will go into alarm conditions.

IT IS FORBIDDEN TO TAMPER WITH THE SAFETY DEVICES.

It is possible to restart the product and therefore restore the automatic operation of the probe only after having eliminated the cause that triggered the safety system. This manual will help you understand which anomaly has occurred, and explain how to intervene according to the alarm message displayed on the appliance.

Technical Dept. - All rights reserved - Reproduction prohibited

36-ALARMS

ALARMS

In the event of an alarm, the crown turns red for "attention".

The symbol and the alarm code appear.

The button turns red and flashes very fast

All other keys are disabled.

PLEASE NOTE Press the button for at least 3" to reset the alarm.

36-ALARMS

ALARM SIGNALLING

If an operating anomaly occurs the stove starts switching off due to the alarm.
The following table describes the possible alarms indicated by the stove, associated to the respective code that appears on the emergency panel and helpful tips to solve the problem.

MESSAGE ON DISPLAY	TYPE OF PROBLEM	SOLUTION
A01 FAILED IGNITION	The flame does not ignite	Check the level of pellets in the hopper. Check that the brazier is correctly positioned in its seat and has no deposits or unburnt material. Make sure the glow plug warms up. Carefully empty and clean the brazier before restarting.
A02 NO FLAME	The fire goes out abnormally	Check the level of pellets in the hopper. Check that the brazier rests correctly in its seat and has no visible deposits of unburnt pellets.
A03 PELLET SAFETY	The temperature of the pellet hopper exceeds the required safety threshold. The structure overheats due to reduced heat dissipation.	The structure is too hot because the product has been used for too long at the maximum power or there is poor ventilation. When the stove is cold enough, press the ⏻ button for at least 3" to reset the alarm. Once the alarm is cleared, the product can be switched on normally.
A04 SMOKE OVERTEMPERA-TURE	The temperature of the exhaust smoke has exceeded certain preset safety limits.	The stove switches off automatically. Let the stove cool down for a few minutes and then switch it on again. Check the smoke expulsion and verify the type of pellets used according to the instructions found in Chap. 2 of this manual.
A05 OBSTRUCTION	Flue clogged - wind.	Check the smoke duct and make sure the door is closed.
	The smoke extractor fails to guarantee sufficient primary air, required for correct combustion.	Draught difficulties or clogged brazier. Check whether the brazier is clogged and clean it, if necessary. Check, and if necessary clean, the smoke duct and the air inlet.
A08 FUMES MOTOR FAULT	Abnormal operation of smoke fan	Check cleanliness of the smoke fan compartment and check whether dirt is blocking it. If this is not enough, the smoke fan is faulty. Contact an authorised service centre to have it replaced.
A09 THERMOCOUPLE FAULT	The smoke probe is faulty and does not detect the exhaust smoke temperature properly.	Contact an authorised service centre to have the component replaced.
A11 FEED SCREW FAULT	Pellet supply fault	Contact an authorised service centre to have the component replaced.

Technical Dept. - All rights reserved - Reproduction prohibited

A12 **GEAR MOTOR SENSOR FAULT**	Faulty gear motor driving sensor (PWM)	Contact an authorised service centre.
A13 **BOARD TEMPERATURE FAULT**	Electronic control unit overheating	The structure is too hot because the product has been used for too long at the maximum power or there is poor ventilation. When the stove is cold enough, press the ⏻ button for at least 3" to reset the alarm. Once the alarm is cleared, the product can be switched on normally.
A14 **ACTIVE SENSOR FAULT**	Faulty air flow rate sensor	This alarm blocks the stove and can be reset from the App. If the sensor is faulty, the alarm appears once again. Contact an authorised service centre to have the component replaced.
A17 **FEED SCREW LOCKED ALARM**	Blocked feed screw due to clogged pellets or a foreign body	The feed screw is not unblocked even after the feed screw unblocking procedure indicated by the software has been carried out (rotating the gear motor in both directions). Try to remove the pellets and/or foreign body with an extractor or call an authorised service centre to perform this operation.
A21 **PRESSURE SWITCH**	Stove door open	Close the door.
	Fuel loading hatch open	Close the hatch.
	Check gaskets	Check that the gaskets of the fire door, tank door and ash door, if any, are intact and in place.
	Pressure switch check	Check that the silicone capillaries are intact, clean and correctly connected to the pressure switch and the machine. Check that the connection nozzle is not obstructed by dirt. If the above checks do not reveal any anomalies, carry out the checks explained in the dedicated paragraph below.
	Draught issue	Check that the smoke passages are clear and that the chimney/smoke duct is not obstructed. In windy areas, ensure that the roof terminal is windproof.
A22 **ROOM PROBE FAILURE**	Room probe anomaly	Contact an authorised service centre to have the component replaced.
POP-UP	Disconnected Wi-Fi probe	Make sure the device has charged batteries Replace the batteries and restart the device connection procedure
POP-UP	Alarms	From the App, it is possible to receive a message regarding the alarms that cannot be reset from the App, such as A01, A02, A03, A05, A21, but which can only be reset from the stove's panel. After resetting the alarm from the panel, reset the message from the App.

36-ALARMS

Mechanical stove block

The following conditions may cause the mechanical stove block:

- Structure overheating ("A03")
- Smoke overheating ("A04")
- During stove operation air entered the combustion chamber or there is an obstruction in the flue ("A05")

Only alarm **A21** emits an intermittent beep as long as the alarm is active. In this situation, the automatic shut-down sequence is activated. When this sequence is initiated, any attempt to restart the system will be ineffective. The display signals the cause of the blockage.
SOLUTIONS:
If "**A03**" appears: the structure is too hot because the product has been used for too long at the maximum power or there is poor ventilation. When the stove cools down sufficiently, clear alarm A03 on the stove panel. Once the alarm is cleared, the product can be switched on normally.
If "**A04**" appears: The stove switches off automatically. Let the stove cool down for a few minutes and then switch it on again. Check the smoke expulsion and verify the type of pellets used according to the instructions found in the specific chapter of the manual.
If "**A05**" appears: the door has been left open for too long or a significant amount of air has entered (e.g. missing smoke fan inspection cap). If these causes are excluded, check and if necessary clean the smoke duct and flue (it is recommended for this operation to be carried out by an MCZ qualified technician).

The product can be switched on again only after having eliminated the cause permanently.

PRESSURE SWITCH CHECK (A21)

This check must only be carried out by a licensed operator.

During commissioning and at each periodic maintenance operation, or in the event of an A21 (or A05) alarm trip not justified by unforeseen openings/obstructions, check that the pressure switch signal is in order:

Switch on the device and set it to minimum power. 15 minutes after ignition, when the flame has stabilised at minimum power, choose one of the following 2 procedures (of your choice):

- Check whether the smoke fan speed remains stable above 900 rpm (to do this, open the "Info" menu item on the graphical user interface), if not, increase the combustion air recipe until this condition is met.
- Alternatively, measure the negative pressure the pressure switch senses by means of a pressure gauge connected to the pressure switch capillary connection to the device. For the product to function properly, the measured negative pressure must be permanently equal to or greater than 14 Pa; otherwise increase the combustion air recipe until this condition is met.

To change the combustion air recipe, enter the technical menu and select the relevant item, which allows you to change the flue gas smoke suction parameters in percentages.
By default the value is set to 0, increase the parameter in the case of poor chimney draught or decrease it in the case of excessive chimney draught.

Technical Dept. - All rights reserved - Reproduction prohibited

37-RECOMMENDATIONS FOR SAFE USE

ONLY CORRECT INSTALLATION AND APPROPRIATE MAINTENANCE AND CLEANING OF THE APPLIANCE CAN GUARANTEE CORRECT OPERATION AND SAFE USE OF THE PRODUCT.

We would like to inform you that we are aware of cases of malfunctioning of domestic pellet-fuelled heating products, mainly due to incorrect installation and use, as well as inadequate maintenance.
We would like to assure you that all of our products are extremely safe and certified according to European standards of reference. The ignition system has been tested with the utmost attention to enhance ignition efficiency and to prevent any type of problem, even in the worst operating conditions. In any case, as with any other pellet-fuelled product, our appliances must be installed correctly and undergo regular periodical cleaning and maintenance to guarantee safe operation. Our studies show us that malfunctioning is mainly due to the combination of part or all of the following factors:

- Brazier holes obstructed or brazier deformed, due to lack of maintenance and conditions which can cause delayed ignition, generating an anomalous production of unburnt gases.
- Insufficient combustion air due to a reduced or clogged air inlet duct.
- Use of smoke ducts nonconforming to regulatory installation requirements, failing to guarantee an adequate draught.
- Partially clogged chimney, due to lack of maintenance, reducing the draught and making ignition difficult.
- End chimneypot not conforming to the indications of the instruction manual, and therefore not suitable to prevent potential inverse draught.
- This factor is crucial when the product is installed in especially windy areas, such as coastal regions.

The combination of one or more of these factors may generate severe malfunctioning conditions.
To keep this from occurring, it is crucial to guarantee that the product is installed in compliance with standards in force.
Furthermore it is of the utmost importance to comply with the following simple rules:

- Every time the brazier is removed for cleaning, it must always be put back properly in the work position before using the product, completely removing any residual dirt left on the support base
- Pellets must never be loaded in the brazier manually, neither before ignition or during operation.
- The build-up of unburnt pellets following failed ignition must be removed before repeating ignition. Also check that the combustion air inlet/smoke outlet is fitted correctly in place and working properly.
- If ignition fails repeatedly, immediately suspend use of the product and contact a qualified technician to check its operation.

Compliance with these indications is absolutely sufficient to ensure proper operation and to avoid any type of problems with the product.
If the aforementioned precautions are not taken, and during ignition the brazier is overloaded with pellets thus generating anomalous smoke in the combustion chamber, carefully follow the indications below:

- Do not disconnect the electrical power to the product for any reason whatsoever: this would stop the smoke extractor, releasing smoke into the room.
- Take the precaution of opening the windows to ventilate the installation room from any smoke (the chimney might not be working properly)
- Do not open the fire door: this would compromise regular operation of the smoke extraction system to the chimney.
- Simply switch the stove off by operating on the on-off button on the control panel (not the rear power supply socket button!) and move away until the smoke has been completely extracted.
- Before attempting re-ignition, clean the brazier and its air passage holes completely of all deposits and unburnt pellets. Put the brazier back in place, removing any residue from its support base. If ignition fails repeatedly, immediately suspend use of the product and contact a qualified technician to check its operation and the chimney.

38-CLEANING

Only by properly servicing and cleaning the product is it possible to ensure its safety and correct operation.

ATTENTION!
All the cleaning operations of all parts must be performed with the product completely cold and unplugged.
Disconnect the product from the 230V power supply before performing any maintenance operation

The product requires little maintenance if used with certified good quality pellets.

DAILY OR WEEKLY CLEANING PERFORMED BY THE USER

Cleaning the ash collection compartment

It is recommended to clean the ash compartment from ashes and any deposits that could obstruct the air passage holes on a weekly basis.
Use a vacuum cleaner to collect any ash residues in the firebox and in the area below it.
Open the firebox door "Q", lower door "D" and ash pan "I", vacuum the area indicated by the arrows.

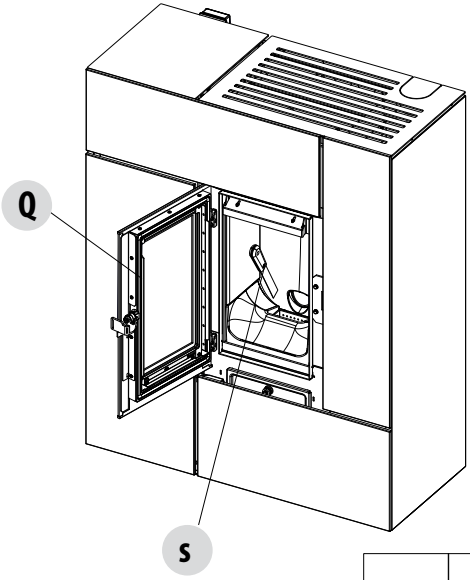

In order to remove any residue, we recommend using a brush or metal spatula "s" (SUPPLIED) to clean the fire area thoroughly, depending on the product. When this operation has been completed, use a vacuum cleaner to remove any residue.

Combustion with CORE technology, depending on the type of pellets used, may lead to the formation of some carbonaceous residue inside the brazier. For this reason, it is necessary to use the brush/metal spatula at least twice a week to remove these deposits, which will also fall in the form of small pieces or crusts into the compartment below. The 310S stainless steel brazier allows easy removal, especially if the brush/spatula is used vigorously.

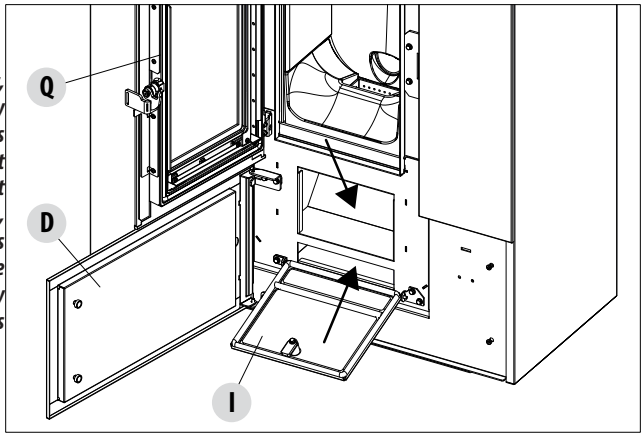

Technical Dept. - All rights reserved - Reproduction prohibited

38-CLEANING

Always carry out these operations **when the stove is switched off and the ash is completely cold**.
Use a suitable vacuum cleaner to remove small sized particles.
The quality of the pellets used and user experience will determine the cleaning frequency required. **However, it is recommended not to exceed 7 days.**
At the end of the daily cleaning phase, remember to close all the doors (see previous page).

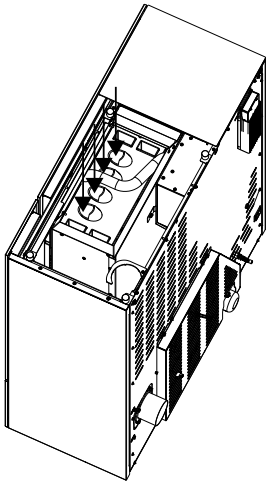

At the top, by removing the upper grid, any deposits can be removed.

CLEANING THE GLASS

It is recommended to clean the ceramic glass with a dry brush, or if it is very dirty, spray with a little specific detergent and clean with a cloth.

ATTENTION!
Do not use abrasive products and do not spray the glass cleaning product on the painted parts and on the door gaskets (ceramic fibre cord).

CLEANING THE CLADDING
CLEANING THE METAL PARTS

Below are a few indications to clean the metal cladding of the stove:

- use only water, if necessary with the addition of neutral detergents (pH7) and characterised by light additives.
- use only water on a cloth. There are electrical parts that could be damaged.
- use soft, non-abrasive cloths. Do not rub the surfaces.
- do not use solvents, abrasive or scratching agents. Do not use prepared compounds for cleaning paints as they could be aggressive.

CLEANING "MATERIA" STONEWARE

Below are a few indications to clean the "MATERIA" cladding:

- to remove dust wipe with a clean, dry cloth
- then use neutral detergents suitable for delicate surfaces
- do not use abrasive cloths to avoid rubbing the surface
- do not use acids or aggressive chemicals such as bleach, ammonia or acid detergents as these products may cause colour fading or create permanent stains

38-CLEANING

CLEANING THE AIR FILTER

A wire mesh air filter is found at the back of the stove (for the models fitted with it), whose purpose is to prevent dirt entering the motor body and the internal sensor.
It is recommended to check that the filter is clean every 15/20 days. If needed remove fluff or the material that has deposited on it.
Inspection and cleaning are required more frequently if there are pets in the house.
Simply remove the filter to clean. To clean it use a brush or a damp cloth or compressed air. Set it back in place by simply pressing it (interlocks).

The filter is made of metallic mesh and is soft and flexible to the touch therefore, when cleaning, be careful not to crush or damage it. In the event of breakage it must be replaced.
ATTENTION!
Never let the stove work without the air filter fitted. MCZ cannot be held liable for any damage caused to the internal components if this requirement is not complied with.

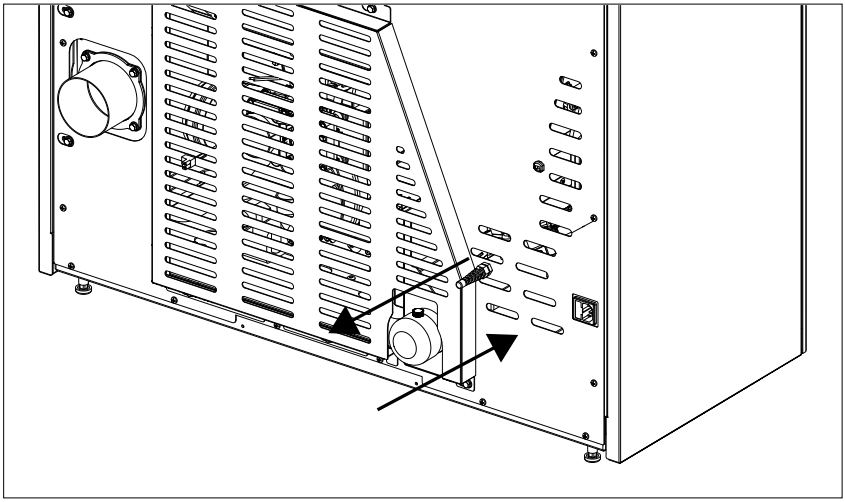

Technical Dept. - All rights reserved - Reproduction prohibited

PERIODIC CLEANING PERFORMED BY A QUALIFIED TECHNICIAN

CLEANING THE HEAT EXCHANGER AND THE LOWER COMPARTMENT

Half-way through the winter season, **but especially at the end**, the compartment through which the exhaust smoke passes will need to be cleaned.

This cleaning process is mandatory in order to facilitate the general removal of all combustion residue, before it becomes very difficult to remove it due to moisture compacting it over time.

ATTENTION:
Cleaning is mandatory to be performed at the end of the season by an authorised and skilled technician so that even the seals can be replaced.

CLEANING THE HEAT EXCHANGER
REMOVING THE FIREBOX CAST IRON PLATES

Clean the upper exchanger when the stove is cold and without the cladding in question. For more thorough cleaning, the firebox cast iron plates can be removed in the following sequence:

- the two side panels "T" and "U"
- the back "Z"
- the base "V"

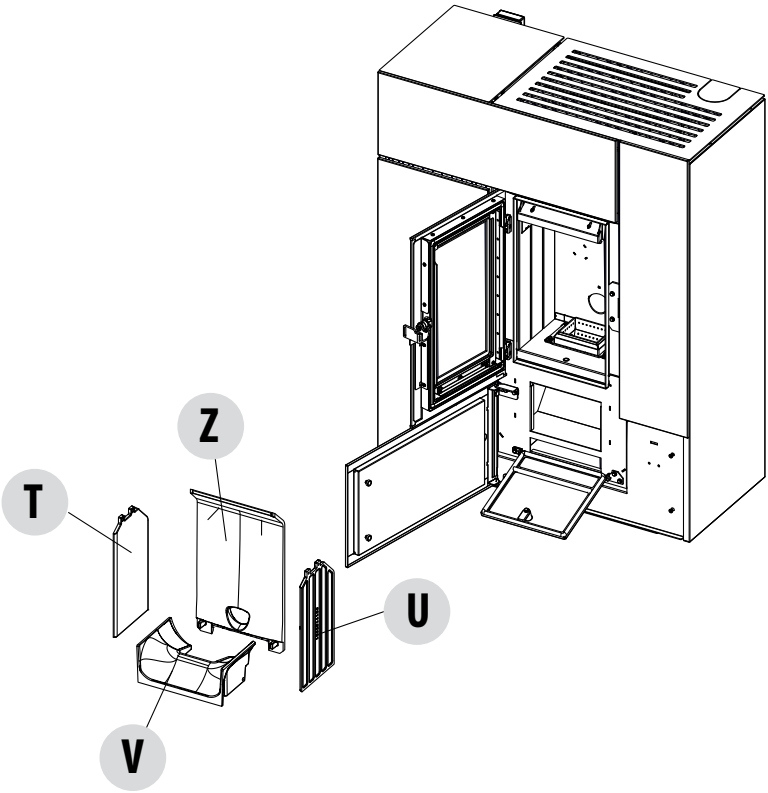

Then remove the upper deflector "J". To do this open the firebox door, hold the top of the plate "J" and lift it upwards, tilt it to the right or to the left in order to release it from the supports and remove it.

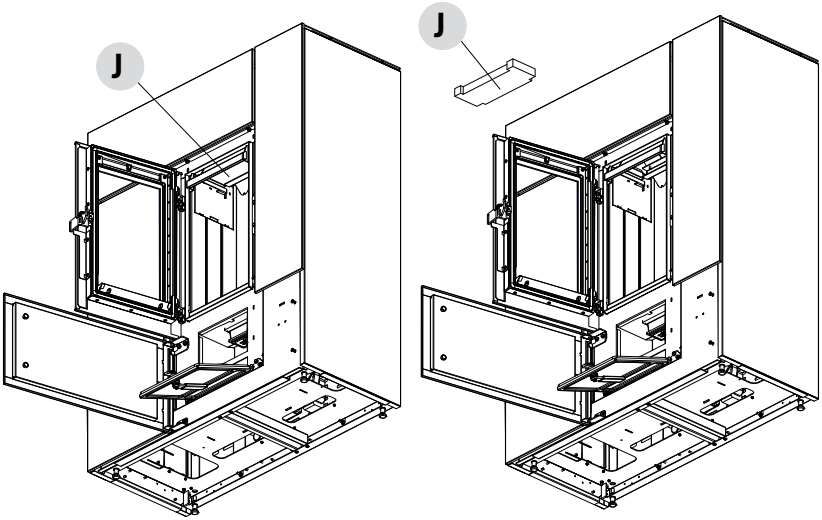

Then remove the two side caps "S". Remove caps "S" by lifting them out of the slots.
Use a flexible brush to scrape the walls of the firebox (see arrow - respectively to the right and to the left of the firebox) where the recently removed plates "S" were, to make the ash fall into the lower compartment.

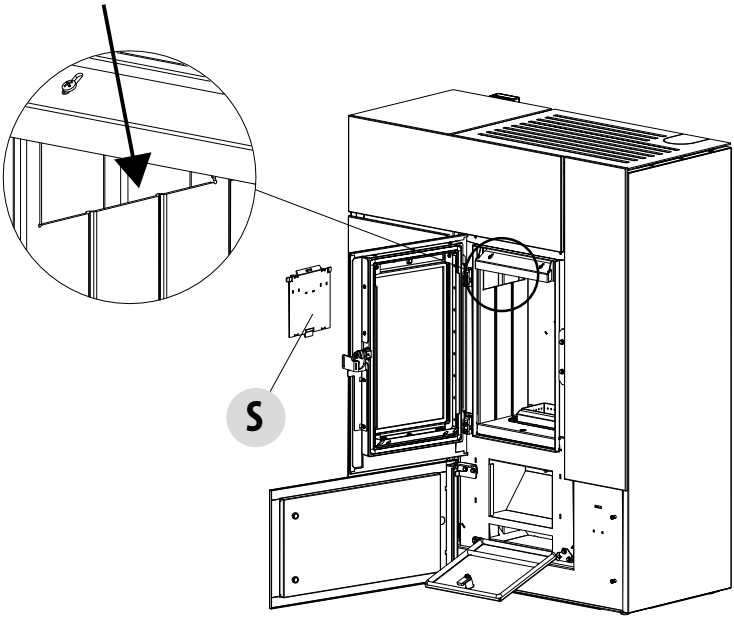

Technical Dept. - All rights reserved - Reproduction prohibited

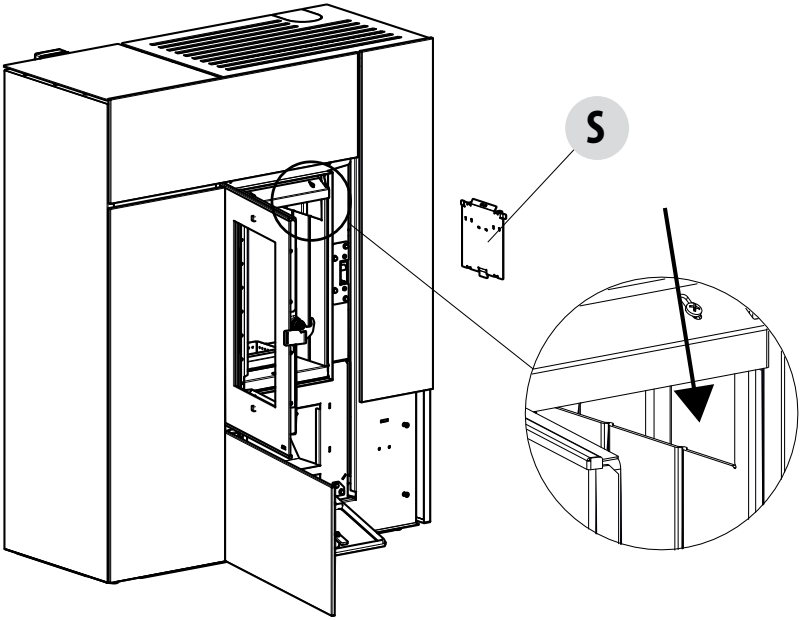

Then thoroughly clean the lower exchanger, replace any gaskets if needed, and reassemble.

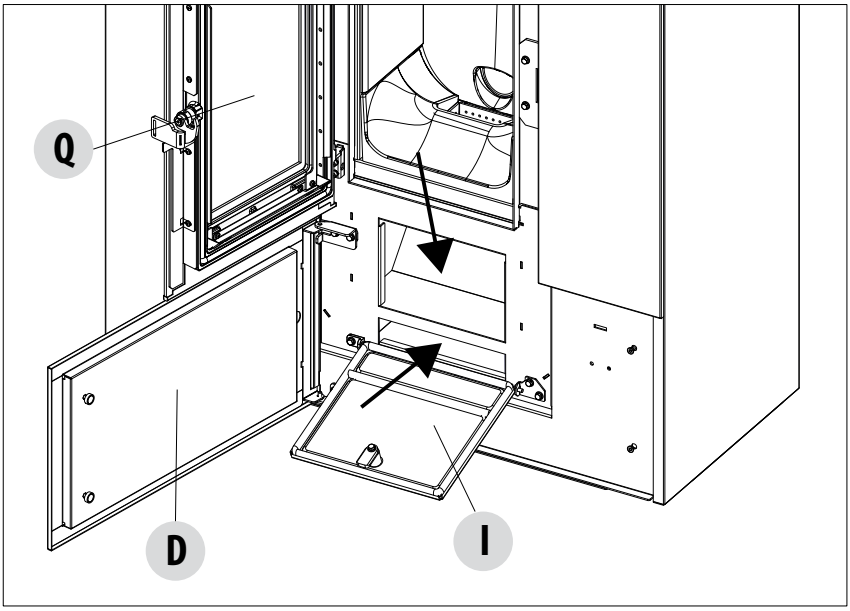

38-CLEANING

CLEANING THE SMOKE EXPULSION SYSTEM AND GENERAL CHECKS

Clean the smoke outlet system, especially around the Tee fittings, elbows and any horizontal sections of the smoke duct. For information on periodically cleaning the flue, contact a skilled chimney sweep.

Check the seal of the ceramic fibre gaskets on the door of the stove. If necessary, order new replacement gaskets from the retailer or contact an authorised service centre to carry out the operation.

ATTENTION:

The frequency with which the smoke outlet system is cleaned depends on the use of the stove and the type of installation.

We recommend relying on an authorised service centre for end-of-season cleaning and maintenance, as they will carry out all of the previously mentioned work and inspect the stove components.

REAR/TOP OUTLET

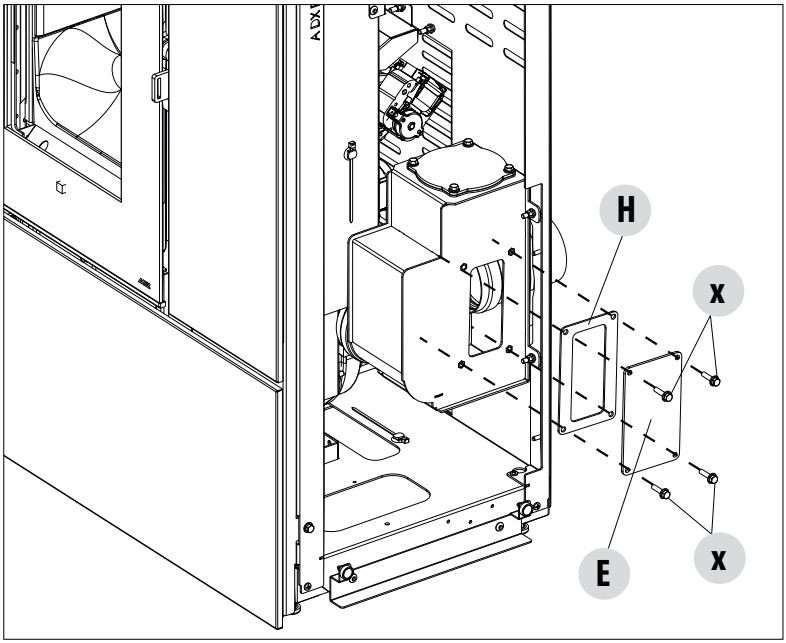

Proceed in the same way for both rear and top smoke outlet versions.

When the side panel has been taken down, clean the smoke pipe.

Remove screws “x”, cap “E” and gasket “H”. Now clean the inside of the smoke box, reassemble all components and replace gasket “H“ if necessary.

Technical Dept. - All rights reserved - Reproduction prohibited

PERIODICAL CHECK OF THE DOOR CLOSURE

Make sure the door closure ensures correct sealing action (with the "paper sheet" test) and that when the door is closed, the closing block (X in the figure) does not protrude from the sheet metal to which it is secured. For some products it will be necessary to disassemble the cladding to be able to assess the anomalous protrusion of the block when the door is closed.

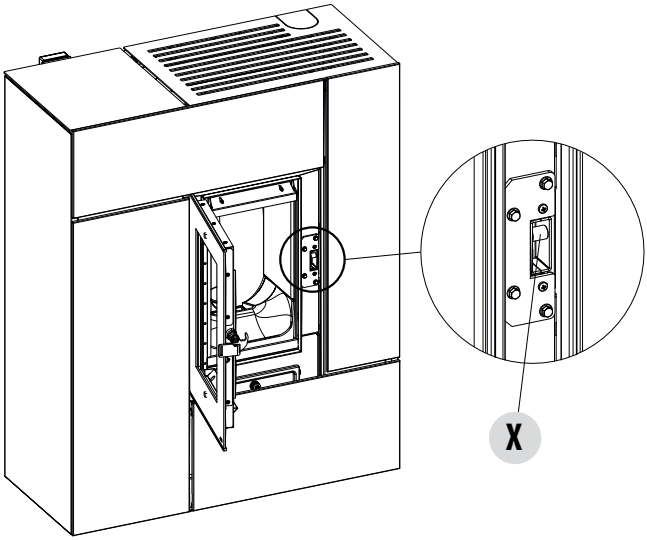

SHUTDOWN (end of season)

At the end of each season, before switching the product off, it is recommended to remove all the pellets from the hopper with a vacuum cleaner with a long pipe.

We recommend removing the unused pellets from the hopper because they can retain moisture. Disconnect any combustion air ducting that can lead to moisture inside the combustion chamber but, above all, ask the specialised technician to refresh the paint inside the combustion chamber with the special silicone spray paints (available at any store or Technical Assistance Centre) during the necessary annual end of season scheduled maintenance operations. This way the paint will protect the inner parts of the combustion chamber, blocking any type of oxidative process.

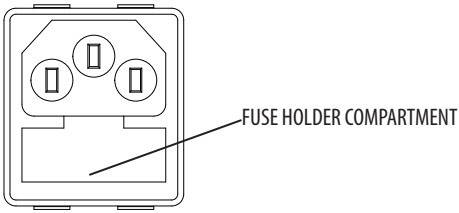

When not in use the appliance must be disconnected from the mains power supply. It is recommended to remove the power cable for additional safety, especially in the presence of children.

The service fuse may have to be replaced if the control panel display does not switch on when the product is switched on again by pressing the main switch on its side.

There is a fusebox on the side of the product, near the power socket. Open the fusebox cover with a screwdriver and replace the fuses if necessary (3.15 A delayed) - seek assistance from an authorised and qualified technician.

38-CLEANING

CHECKING THE INTERNAL COMPONENTS

ATTENTION!
The internal electromechanical components must only be checked by qualified personnel whose technical expertise includes combustion and electricity.

We recommend for this yearly maintenance to be carried out (with a scheduled service contract). This operation consists of a visual and functional inspection of the internal components. A summary of the checks and/or maintenance operations that are essential for the correct operation of the product is provided below.

	PARTS/FREQUENCY	2-3 DAYS	7 DAYS	15/20 DAYS	1 YEAR
UNDER THE USER'S RESPONSIBILITY	Ash collection compartment*		•		
	Glass	•			
	Air filter			•	
BY THE QUALIFIED TECHNICIAN	Upper exchanger				•
	Lower exchanger				•
	Smoke duct				•
	Gaskets				•
	Door closure operation				•

* Emptying of the ash depends on various factors (pellet type, stove power, stove use, type of installation...); the exact emptying time will be suggested by experience.

Technical Dept. - All rights reserved - Reproduction prohibited

39-TROUBLESHOOTING

ATTENTION!
All repairs must only be carried out by a specialised technician, with the product switched off and unplugged.

ANOMALY	POTENTIAL CAUSES	SOLUTIONS
The pellets are not fed into the combustion chamber.	The pellet hopper is empty.	Fill the hopper with pellets.
	Sawdust has blocked the feed screw.	Empty the hopper and remove the sawdust from the feed screw by hand.
	Faulty gear motor.	Replace the gear motor.
	Faulty circuit board.	Replace the electric board.
The fire goes out or the product stops automatically.	The pellet hopper is empty.	Fill the hopper with pellets.
	The pellets are not fed in.	See the previous anomaly.
	The pellet temperature safety probe has tripped.	Let the product cool down, restore the thermostat until the lockout is off and switch the appliance back on. If the problem persists contact Technical Assistance.
	Chrono active.	Check if the chrono setting is active.
	The door is not closed properly or the gaskets are worn.	Close the door and replace the gaskets with original ones.
	Unsuitable pellets.	Change the type of pellets with those recommended by the manufacturer.
	Low pellet supply.	Check the flow of fuel following the instructions in the manual.
	The combustion chamber is dirty.	Clean the combustion chamber, following the instructions in the manual.
	Clogged outlet.	Clean the smoke duct.
	Faulty smoke extraction motor.	Check the motor and replace it, if required.

39-TROUBLESHOOTING

ANOMALY	POTENTIAL CAUSES	SOLUTIONS
The product works for a few minutes and then switches off.	Start-up phase is not completed.	Repeat the ignition stage.
	Temporary power cut.	Repeat ignition.
	Clogged smoke duct.	Clean the smoke duct.
	Faulty or broken temperature probes.	Check and replace the probes.
Pellets accumulate in the brazier, the glass of the door gets dirty and the flame is weak.	Insufficient combustion air.	Make sure that the air inlet in the room is fitted and clear. Clean the brazier and check that all the holes are clear. Perform a general cleaning of the combustion chamber and the smoke duct. Check the condition of the door gaskets.
	Damp or unsuitable pellets.	Change the type of pellets.
	Faulty smoke extraction motor.	Check the motor and replace it, if necessary.
The smoke extractor motor is not working.	No power to the appliance.	Check the mains voltage and the protection fuse.
	The motor is faulty.	Check the motor and capacitor and replace them, if necessary.
	Defective circuit board.	Replace the electric board.
	The control panel is broken.	Replace the control panel.
The convection air fan never stops.	Thermal probe defective or broken.	Check the probe and replace it, if necessary.
	Faulty fan.	Wait a few minutes and check motor operation, replace it if necessary.
	The product has not reached the shutdown temperature yet.	Wait.

Technical Dept. - All rights reserved - Reproduction prohibited

39-TROUBLESHOOTING

ANOMALY	POTENTIAL CAUSES	SOLUTIONS
The air fan does not switch on.	The product has not reached the temperature.	Wait.
The product always runs at maximum power when in automatic mode.	The room thermostat is in maximum position.	Set the temperature again.
	Malfunctioning temperature probe.	Check the probe and replace it if required.
	Faulty or broken control panel.	Check the panel and replace if necessary.
The product does not switch on.	No power supply.	Check that the plug is inserted.
	Fuse blown due to a fault.	Replace the fuse with one of identical characteristics (5x20 mm T 3.15A).
	Check the brazier.	Clean the brazier and remove any deposits or residues of unburnt pellets.
	Check the position of the brazier.	Put the brazier back in its place.
	Check that the glow plug warms up.	Check and if necessary, replace.
	Clogged smoke outlet or smoke duct.	Clean the smoke outlet and/or the smoke duct.
	Faulty glow plug.	Replace the glow plug.

40-CIRCUIT BOARD

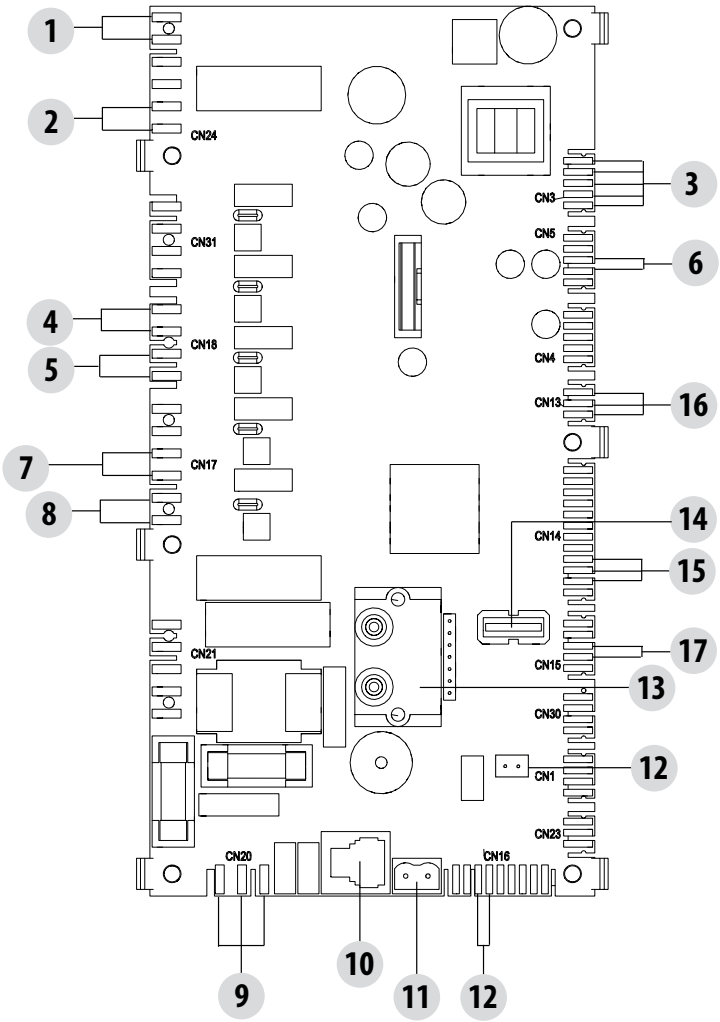

LIVE ELECTRICAL CABLES

DISCONNECT THE POWER SUPPLY CABLE 230V BEFORE CARRYING OUT ANY OPERATIONS ON THE ELECTRICAL BOARDS

KEY

1. AIR PRESSURE SWITCH	10. MAESTRO CONTROL PANEL
2. KLIXON	11. SMOKE TEMPERATURE PROBE
3. BRUSHLESS GEAR MOTOR	12. ROOM PROBE
4. ROOM FAN	13. PRESSURE DIFFERENTIAL
5. AIR FAN 1	14. SOFTWARE UPDATE (USB)
6. BRAZIER MOTOR	15. SMOKE FAN ENCODER
7. SMOKE EXTRACTOR	16. PELLET LEVEL SENSOR (OPTIONAL)
8. IGNITION (GLOW PLUG)	17. MICRO SWITCH
9. BOARD POWER SUPPLY	

PLEASE NOTE The electrical wiring of individual components is fitted with pre-wired connectors of different sizes.

Technical Dept. - All rights reserved - Reproduction prohibited

Google Play

Download on the App Store

maestro+

MCZ GROUP S.p.A.
Via La Croce n°8
33074 Vigonovo di Fontanafredda (PN) – ITALY
Telephone: 0434/599599 a.s.
Fax: 0434/599598
Website: www.mcz.it
e-mail: mcz@mcz.it