SATURNO 16

Certificate model name: SATURNO 16

www.cadelsrl.com



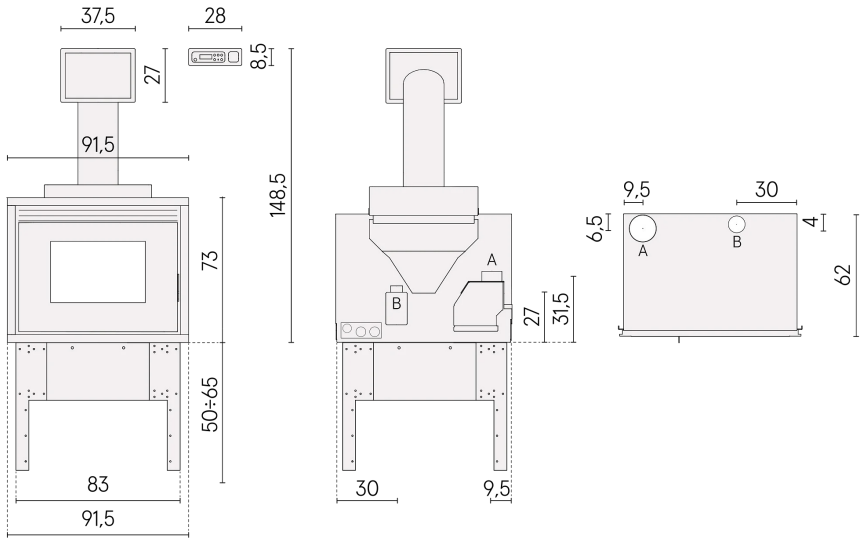

Pellet Hydro

TECHNICAL DATA

Thermic Power (at min-at max)	kW	5,8 - 18,0
Introduced thermal power (at max)	kW	19,1
Water useful power (at min-at max)	kW	13,0 - 3,8
Seasonal energy efficiency	ηs [%]	90
Useful efficiency (at min-at max)	%	96 - 94
Heatable volume (at min-at max)	m³	165 - 513
CO_2 (min-max)	%	6,4- 10,4
Emissions CO (13% O_2) (at min-at max)	mg/Nm³	275 - 111
Emissions OGC (13%O_2) (at min-at max)	mg/Nm³	4,0- 2,0
Emissions NOX (13% O_2) (at min-at max)	mg/Nm³	84 - 114
Dust content at 13% O_2 (at min-at max)	mg/Nm³	19 - 12
Fuel Pellet	mm	Ø6 L=3÷40
Boiler capacity (H_2O)	l	22
Hopper capacity	kg	40
Hourly consumption (at min-at max)	kg/h	1,2 - 3,9
Autonomy (at min-at max)	h	10 - 33
Supply and frequency	V-Hz	230-50
Ignition electrical absorption	W	380
Operating electrical absorption (at max)	W	125
Draught for chimney sizing calculation (EN13384-1)	Pa	2
Mass of smoke (at min-at max)	g/sec	6,5 - 13,2
Exhaust fumes temperature (at min-at max)	°C	64 - 116
Distance from material comb. (back/side/under)	mm	220+30 / 70+30 / 500
Distance to material comb. (front/top)	mm	1000
Exhaust fumes outlet (A)	Ø mm	100
Combustion air inlet (B)	Ø mm	50
Appliance Type (tightness)	Type	CC50

PLUS

- Upper exhaust
- Go Fast - Faster pellet ignition
- Water temperature sensor
- Air temperature sensor
- Connection to the heating system
- Hydraulic kit included
- Cast iron burning pot
- Connection to the external thermostat

AVAILABLE FINISHES

7020016	Steel Black	EAN 8053859012269

OPTIONAL

5024009	Support kit	EAN 8053859020936
5017002	Ntc probe wire	EAN 8053859015574
5017003	Boiler snubber module kit	EAN 8053859015581
5022004	Anticondensation valve kit	EAN 8053859015598

CERTIFICATIONS

European standards
BImSchV 2015
Regensburg
München
Stuttgart
Aachen

EN 16510-1:2022 / EN 16510-2-6:2022

CE

A++

STOVE PACKAGE

L (cm)	H (cm)	P (cm)
80	125	95

Volume (m³)	0,95
Gross weight (kg)	250
Net weight (kg)	230

STORAGE

MAX 2

1

N° (max)
2

TRANSPORT

42 pz

Rev. 3112026

ENERG
енергия · ενεργεια
Y IJA IE IA

CADEL S.R.L.

SATURNO 16

A++

A++
A+
A
B
C
D
E
F
G

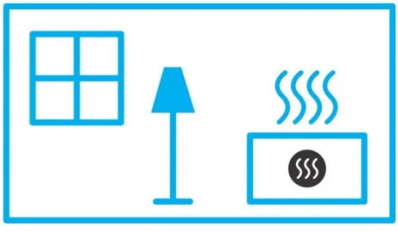

5,0
kW

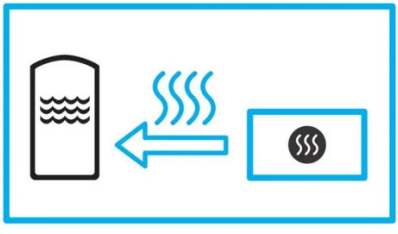

13,0
kW

ENERGIA · ЕНЕРГИЯ · ΕΝΕΡΓΕΙΑ · ENERGIJA · ENERGY · ENERGIE · ENERGI

2015/1186

CADEL

DECLARATION OF PERFORMANCE according to Regulation (EU) No 305/2011

Nr. DoP:0165-00

Models	SATURNO 16
Intended use of the product:	Mechanically fed inset fitted with a boiler burning wood pellets
Manufacturer	Cadel srl - Via Martiri della Libertà, 74 - 31025 S. Lucia di Piave (TV) - Italia
Mark	CADEL
AVCP system	System 3
Notified body	NB 0051
Test report number	CS25-0124727-01
Harmonised technical specification	EN 16510-1:2022 / EN 16510-2-6:2022

ESSENTIAL CHARACTERISTICS

Stability and mechanical resistance	Load bearing capacity	20 kg	
Fire safety - protection of combustible materials	Minimum distance to combustible materials - bottom (dB)	500 mm	
	Minimum distance to combustible materials - front floor (dF)	750 mm	
	Minimum distance to combustible materials - ceiling (dC)	mm	
	Minimum distance to combustible materials - rear (dR)	220+30 mm	
	Minimum distance to combustible materials - side (dS)	70+30 mm	
	Minimum distance to combustible materials - lateral radiation (dL)	750 mm	
	Minimum distance to combustible materials - frontal radiation (dP)	1000 mm	
	Thickness of protective insulating material	30 mm	
	Thermal conductivity of protective insulating material (λd)	/	
	Flue temperature class	T200G	
Performance - Emissions		Nominal power	Reduced power
	Carbon monoxide emissions (CO at 13% O2)	111 mg/Nm³	275 mg/Nm³
	Emission of nitrogen oxides (NOX at 13% O2)	114 mg/Nm³	84 mg/Nm³
	Emission of organic gaseous compounds (OGC at 13% O2)	2 mg/Nm³	4 mg/Nm³
	Particulate matter emissions (PM at 13% O2)	12 mg/Nm³	19 mg/Nm³
Performance - Power and efficiency	Heating power to the environment	18,0 kW	5,8 kW
	Heating power to the water	13,0 kW	3,8 kW
	Efficiency - Useful efficiency	94 %	96 %
Safe and accessible use - chimney installation data	Flue gas outlet temperature	116 °C	64 °C
	Flue gas mass flow	13,2 g/sec	6,5 g/sec
	Draught	10 Pa	9 Pa
	Draught for chimney sizing calculation (EN13384-1)	2 Pa	
Energy efficiency index	Seasonal energy efficiency	90 ηs [%]	
	Energy efficiency index	132	
	Energy efficiency class (A++ / G scale)	A++	
	Electrical consumption at nominal heat output	125 W	
	Electrical consumption at partial load heat output	85 W	
	Electrical consumption in standby mode	1,2 W	
Sustainable use of natural resources	Environmental sustainability information	NPD	

The performance of the product identified above is in conformity with the set of declared performances.

This declaration of performance is issued in accordance with Regulation (EU) No 305/2011 under the responsibility of the manufacturer identified above.

CADEL s.r.l.
Via Martiri della Libertà, 74
31025 SANTA LUCIA DI PIAVE (TV)
Tel. 0438 1520200 - Fax 0438.73343
Partita IVA 03202180265
R.E.A. TV 227665 - Reg. Soc. Trib. TV 185949

Santa Lucia di Piave, 03/02/26

Dassie Roberto (R&D Manager)

CADEL

EU DECLARATION OF CONFORMITY

N. DoC 0165-00

Models	SATURNO 16
Intended use of the product:	Mechanically fed inset fitted with a boiler burning wood pellets
Manufacturer	Cadel srl - Via Martiri della Libertà, 74 - 31025 S. Lucia di Piave (TV) - Italia
Trade mark	CADEL
AVCP system	System 3
Notified body	NB 0051
Test report number	CS25-0124727-01
Harmonised technical specification	EN 16510-1:2022 / EN 16510-2-6:2022

In accordance with the directives:

EMC (2014/30/UE)
LVD (2014/35/UE)
RoHS (2011/65/UE) (2015/863/UE)
ECO DESIGN (2009/125/CE)
RED (2014/53/UE)

The following harmonised standards or technical specifications (designations) which comply withgood engineering practice in safety matters in force within the EU have been applied

EN 55014-1:2017 / EN 55014-2:2015

EN 61000-6-2:2017 / EN 61000-6-3:2007 + A1:2011 / EN 61000-3-2:2018 / EN 61000-3-3:2013 + A1:2018

EN 60335-1:2012 + A11:2014 + (IEC) A1:2013 + (IEC) A2:2016 + A12:2017 + A13:2017

EN 60335-2-102:2016 / EN 62233:2008

EN IEC 63000:2018

Commission Regulation (EU) 2015/1185

ETSI EN 300 328:2016 (V2.1.1)

As manufacture and/or authorised representative within EU, we declare under our sole responsibility that the equipments follow the essential requirements foreseen by above mentioned Directives.

CADEL s.r.l.
Via Martiri della Libertà, 74
31025 SANTA LUCIA DI PIAVE (TV)
Tel. 0438 1520200 Fax 0438.73343
Partita IVA 0 3 2 0 2 1 8 0 2 6 5
R.E.A. TV 227665 - Reg. Soc. Trib. TV 185949

Santa Lucia di Piave, 03/02/26

Dassie Roberto (R&D Manager)

CADEL

INFORMATION REQUIREMENTS FOR SOLID FUEL LOCAL SPACE HEATERS ACCORDING TO COMMISSION REGULATIONS (EU) 2015/1185 - (EU) 2015/1186 (PRODUCT FICHE)

Models	SATURNO 16
Intended use of the product:	Mechanically fed inset fitted with a boiler burning wood pellets
Manufacturer	Cadel srl - Via Martiri della Libertà, 74 - 31025 S. Lucia di Piave (TV) - Italia
Trade mark	CADEL
AVCP system	System 3
Notified body	NB 0051
Test report number	CS25-0124727-01
Harmonised technical specification	EN 16510-1:2022 / EN 16510-2-6:2022

ESSENTIAL CHARACTERISTICS

Fuel	Log wood, moisture content ≤ 25 %			No	
	Compressed wood with moisture content < 12 %			Yes	
Type of heat output/room temperature control (select one)	Single stage heat output, no room temperature control			No	
	Two or more manual stages, no room temperature control			No	
	With mechanic thermostat room temperature control			No	
	With electronic room temperature control			No	
	With electronic room temperature control plus day timer			No	
	With electronic room temperature control plus week timer			Yes	
Other control options (multiple selections possible)	Room temperature control, with presence detection			No	
	Rroom temperature control, with open window detection			No	
	With distance control option			Yes	
Performance - Emissions	No	Symbol		Nominal power	Reduced power
	Carbon monoxide emissions (CO at 13% O2)	COnom	COpart	111 mg/Nm³	275 mg/Nm³
	Emission of nitrogen oxides (NOX at 13% O2)	NOxnom	NOxpart	114 mg/Nm³	84 mg/Nm³
	Emission of organic gaseous compounds (OGC at 13% O2)	OGCnom	OGCpart	2 mg/Nm³	4 mg/Nm³
	Particulate matter emissions (PM at 13% O2)	PMnom	PMpart	12 mg/Nm³	19 mg/Nm³
Performance - Power and efficiency	Heating power to the environment	Pnom	Ppart	18,0 kW	5,8 kW
	Heating power to the water	Pwnom	PWpart	13,0 kW	3,8 kW
	Efficiency - Useful efficiency	ηnom	ηpart	94 %	96 %
Space heating efficiency	Seasonal energy efficiency	ηs		90 ηs [%]	
	Energy efficiency index	EEI		132	
	Energy efficiency class (A++ / G scale)	-		A++	
Auxiliary electricity consumption	Electrical consumption at nominal heat output	elmax		0.125 kW	
	Electrical consumption at partial load heat output	elmin		0.085 kW	
	Electrical consumption in standby mode	elSB		0.001 kW	
Sealed Chamber	Appliance Type (tightness)	Type		CC50	

Observe the specific precautions for installation, assembly and maintenance indicated in the manual accompanying the product, and the national and local rules in force

CADEL s.r.l.
Via Martiri della Libertà, 74
31025 SANTA LUCIA DI PIAVE (TV)
Tel. 0438 1520200 - Fax 0438.73343
Partita IVA 03202180265
R.E.A. TV 227665 - Reg. Soc. Trib. TV 185949

Santa Lucia di Piave, 03/02/26

Dassie Roberto (R&D Manager)